FRONT ELEVATION

P:\20111175\In\2011.10.13\Elevations\Keystone Duplex.dwg, 1:96

REAR ELEVATION

P:\20111175\In\2011.10.13\Elevations\Keystone Duplex.dwg, 1:96

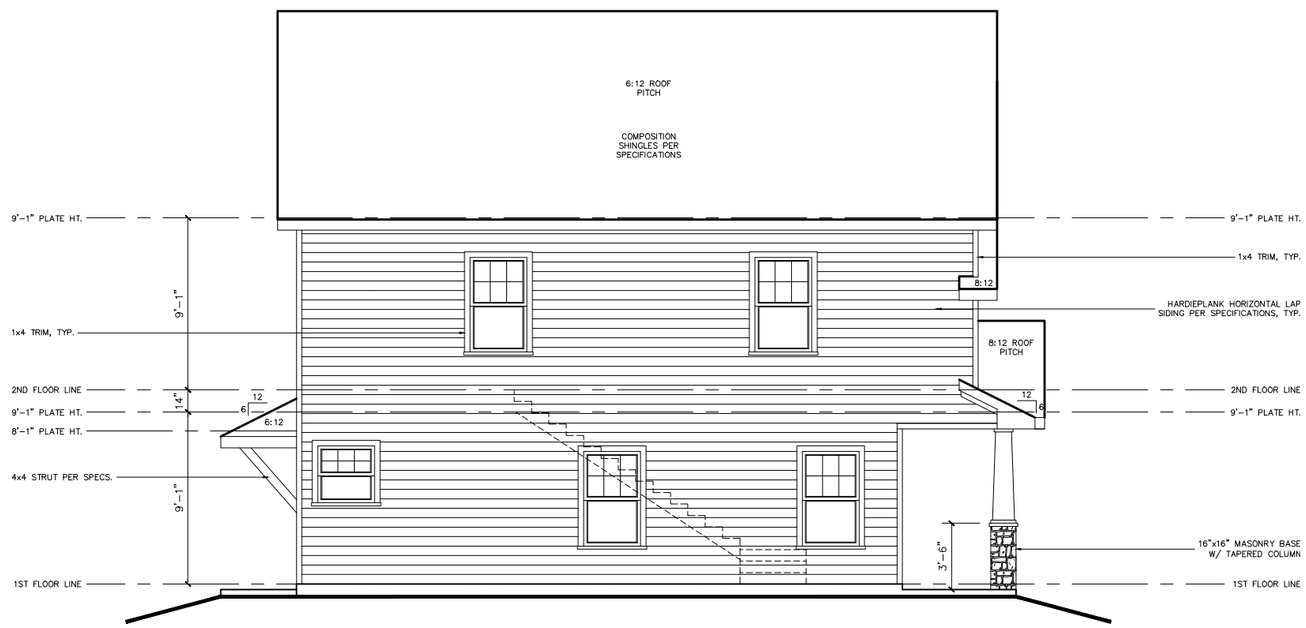

LEFT ELEVATION

P:\20111175\In\2011.10.13\Elevations\Keystone Duplex.dwg, 1:96

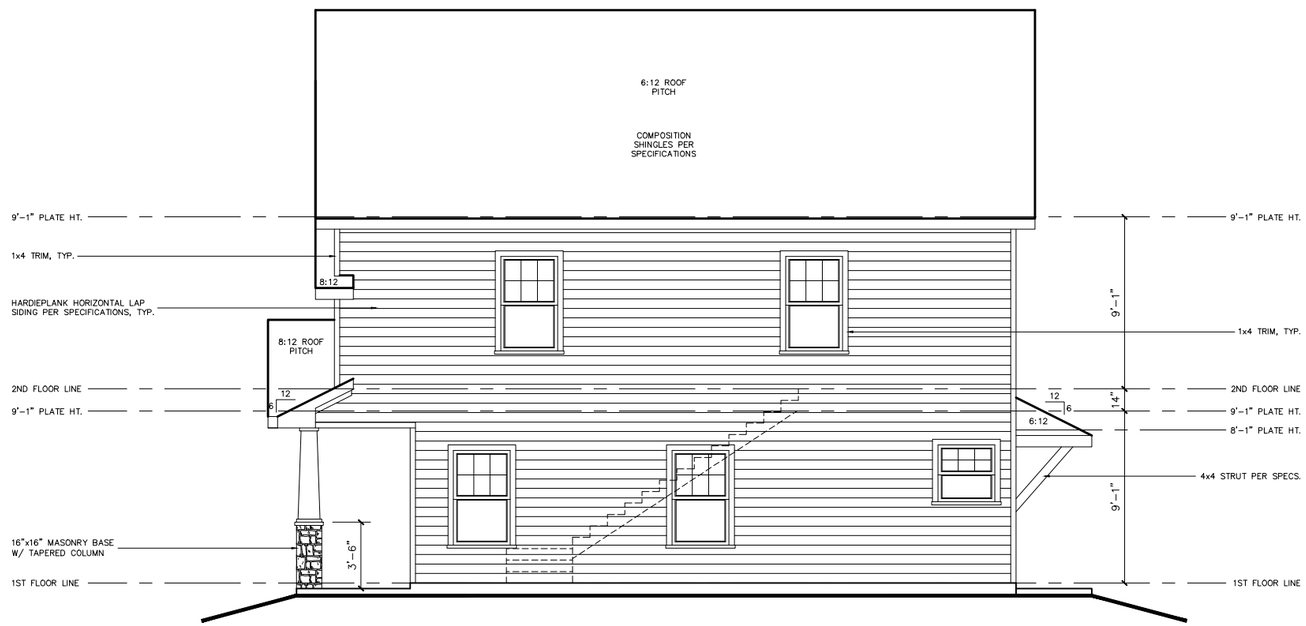

RIGHT ELEVATION

P:\20111175\In\2011.10.13\Elevations\Keystone Duplex.dwg, 1:96

CEILING AND CEILING JOISTS

SPECIES AND GRADE: #3 S.P. FOR SPANS UNDER 8' U.N.O.
#2 S.P. FOR SPANS OVER 8' U.N.O.
SIZE AND SPACING: 2x6 @ 24" O.C. U.N.O.
CEILING SHEATHING: 1/2" GYPSUM PANELS

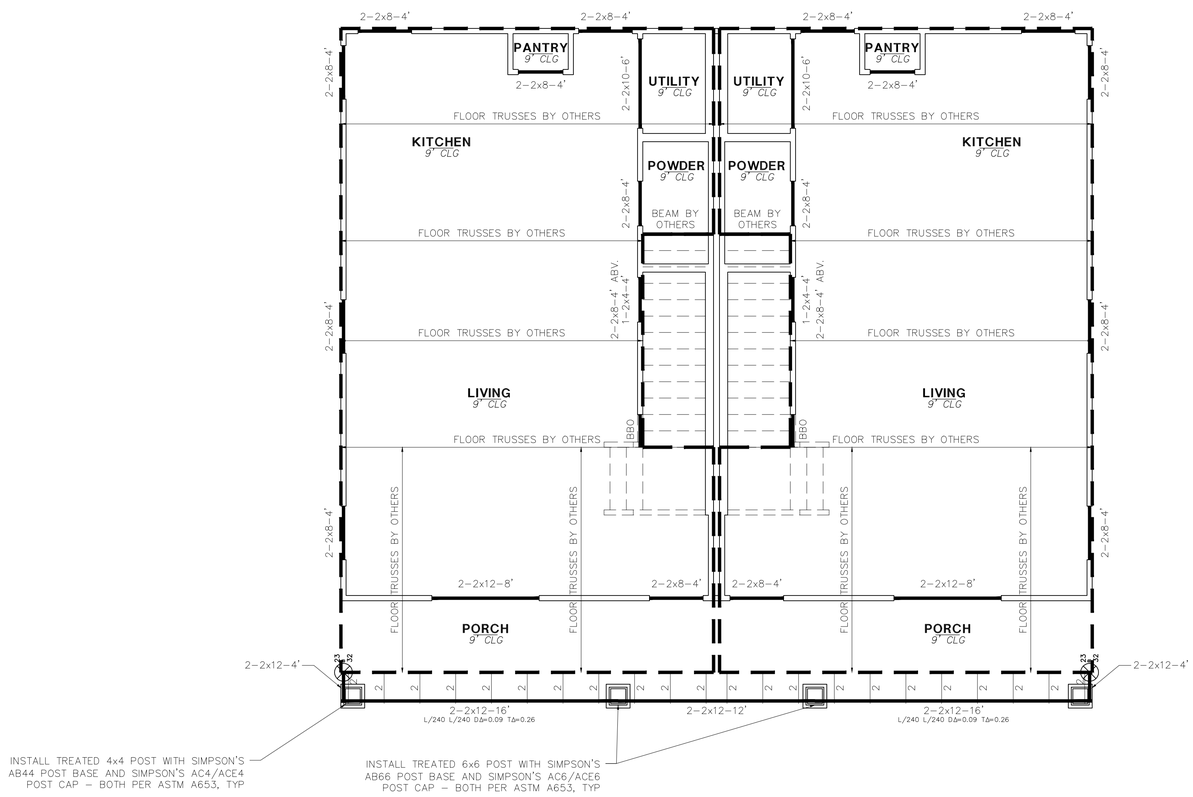

HEADER NOTES:

HEADERS BELOW FLOOR SYSTEM HAVE NOT BEEN DESIGNED TO SUPPORT CONCENTRATED LOADS IMPOSED FROM ABOVE. FLOOR SYSTEM DESIGNER TO DETERMINE HEADER SIZE FOR ALL HEADERS SUPPORTING CONCENTRATED LOADS. NON-LOAD BEARING HEADERS MAY BE FRAMED WITH FLAT 2x4. REFER TO TRUSS DESIGN TO DETERMINE LOAD BEARING POINTS.

TREATED LUMBER NOTES:

ALL NAILS, SCREWS, HANGERS, ETC. INSTALLED WITH TREATED LUMBER TO COMPLY WITH APPROPRIATE ASTM STANDARDS. EG. FASTENERS TO COMPLY WITH ASTM A153, HANGERS TO COMPLY WITH ASTM A653, OR ASTM A123.

MLAW TO REVIEW TRUSS LAYOUT DESIGN FOR STRUCTURAL INTEGRITY INTERRELATED TO FRAMING DESIGN

THIS PLAN IS VALID IN BELL, BEXAR, COMAL, HAYS, MCLENNAN, MILAM, TRAVIS, AND WILLIAMSON COUNTIES.

LEGEND

- DEAD LOAD SOURCE / LIVE LOAD — POINT LOAD
- LINE LOAD
- ENGINEERED BEAM
- L/XXX L/XXX DΔ=X.XX TΔ=X.XX — DEFLECTION CRITERIA
- FLOOR FRAMING EXTENTS
- DOUBLE CEILING JOIST
- TJI FLOOR JOIST
- CEILING LINE

LEVEL 1 CEILING FRAMING
1/4" = 1'-0"

MLAW
CONSULTANTS AND ENGINEERS
2804 LONGHORN BLVD.
AUSTIN, TEXAS 78758
(512) 835-7000

PROPRIETOR
BRECKENRIDGE PROPERTIES
7004 BEE CAVE RD.
BLDG. 3, STE. 330
AUSTIN, TX 78746

CONTRACTOR
MERCK CONTRACTING
P.O. BOX 1105
WACO, TX 78703

KEYSTONE DUPLEX PLAN

ASPEN HEIGHTS TSU
201 COPPER BEECH DRIVE
SAN MARCOS, TX 78666

CLIENT: BRECKENRIDGE

JOB No:1012049053.201
DATE: 10-06-10
DRAWN: EE
CHECK:

A 12-16-10 FLR/RF TRUSSES EE
B 01-07-11 BARTOP WALLS EE

1

SHEET 1 OF 6

P:\2011\1175\In\2011.10.13\Floor Plans\Keystone Duplex.dwg, 1:1

CEILING AND CEILING JOISTS

SPECIES AND GRADE: #3 S.P. FOR SPANS UNDER 8' U.N.O.
#2 S.P. FOR SPANS OVER 8' U.N.O.
SIZE AND SPACING: 2x6 @ 24" O.C. U.N.O.
CEILING SHEATHING: 1/2" GYPSUM PANELS

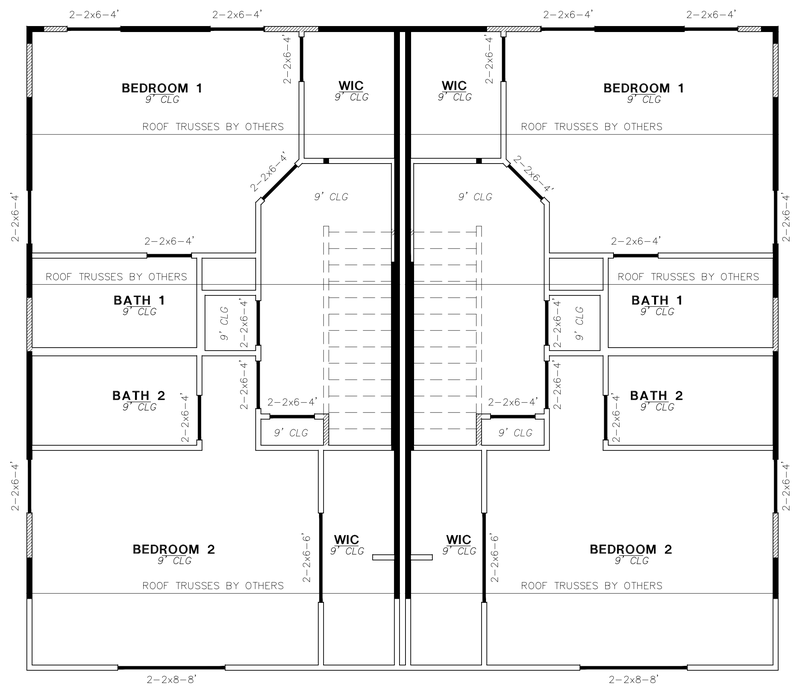

HEADER NOTES:

HEADERS BELOW FLOOR SYSTEM HAVE NOT BEEN DESIGNED TO SUPPORT CONCENTRATED LOADS IMPOSED FROM ABOVE. FLOOR SYSTEM DESIGNER TO DETERMINE HEADER SIZE FOR ALL HEADERS SUPPORTING CONCENTRATED LOADS. NON-LOAD BEARING HEADERS MAY BE FRAMED WITH FLAT 2x4. REFER TO TRUSS DESIGN TO DETERMINE LOAD BEARING POINTS.

TREATED LUMBER NOTES:

ALL NAILS, SCREWS, HANGERS, ETC. INSTALLED WITH TREATED LUMBER TO COMPLY WITH APPROPRIATE ASTM STANDARDS. EG. FASTENERS TO COMPLY WITH ASTM A153, HANGERS TO COMPLY WITH ASTM A653, OR ASTM A123.

MLAW TO REVIEW TRUSS LAYOUT DESIGN FOR STRUCTURAL INTEGRITY INTERRELATED TO FRAMING DESIGN

THIS PLAN IS VALID IN BELL, BEXAR, COMAL, HAYS, MCLENNAN, MILAM, TRAVIS, AND WILLIAMSON COUNTIES.

LEGEND

- DEAD LOAD / SNOW / LIVE LOAD — POINT LOAD
- ENGINEERED BEAM
- L/XXX L/XXX DΔ=X.XX TΔ=X.XX — DEFLECTION CRITERIA
- DOUBLE JOIST
- CEILING LINE
- WALL STACKED ON LOWER WALL
- WALL STACKED ON LOWER BEAM

LEVEL 2 CEILING FRAMING
1/4" = 1'-0"

MLAW
CONSULTANTS AND ENGINEERS
2804 LONGHORN BLVD.
AUSTIN, TEXAS 78758
(512) 835-7000

PROPRIETOR
BRECKENRIDGE PROPERTIES
7004 BEE CAVE RD.
BLDG. 3, STE. 330
AUSTIN, TX 78746

CONTRACTOR
MERCK CONTRACTING
P.O. BOX 1105
WACO, TX 78703

KEYSTONE DUPLEX PLAN

ASPEN HEIGHTS TSU
201 COPPER BEECH DRIVE
SAN MARCOS, TX 78666

CLIENT: BRECKENRIDGE

JOB No:1012049053.201
DATE: 10-06-10
DRAWN: EE
CHECK:

A 12-16-10 FLR/RF TRUSSES EE
B 01-07-11 BARTOP WALLS EE

2
SHEET 2 OF 6

P:\2011\1175\hl\2011.10.13\Floor Plans\Keystone Duplex.dwg, 1:1

THIS ROOF SYSTEM DESIGNED FOR COMPOSITION ROOF. IF TILE IS TO BE USED, OR OTHER COVERING EXCEEDING 5 PSF, CONTACT ENGINEER FOR REDESIGN

ROOF AND RAFTERS

SPECIES AND GRADE: #3 S.P. FOR SPANS UNDER 8' U.N.O.
#2 S.P. FOR SPANS OVER 8' U.N.O.

SIZE AND SPACING:
RAFTERS 2x6 @ 24" O.C. U.N.O.
HIPS, VALLEYS AND RIDGES PER FRAMING DETAILS
ROOF SHEATHING 7/16" STRUCT. PANEL

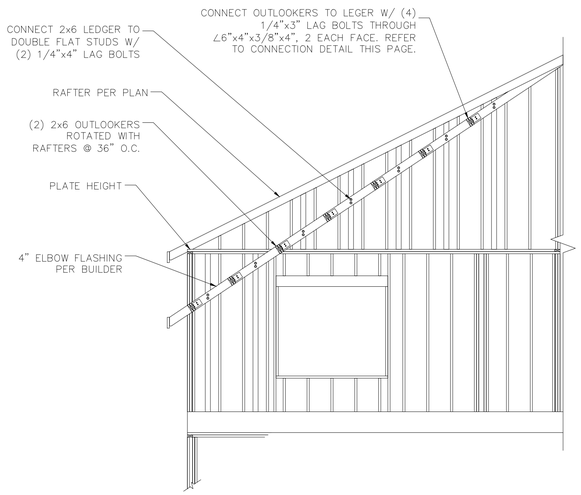

RAFTER DETAIL (ELEVATION)

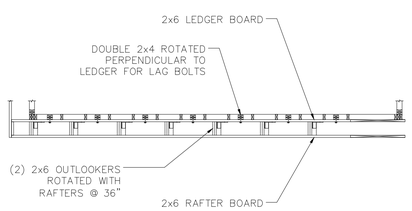

RAFTER DETAIL (PLAN)

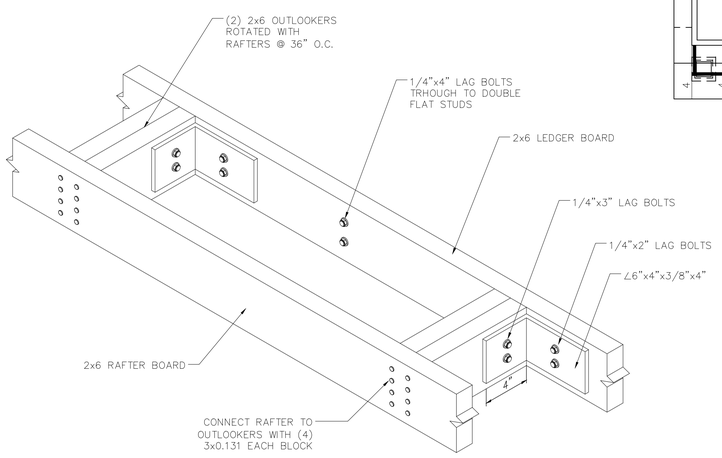

RAFTER DETAIL (ISOMETRIC)
NOT TO SCALE

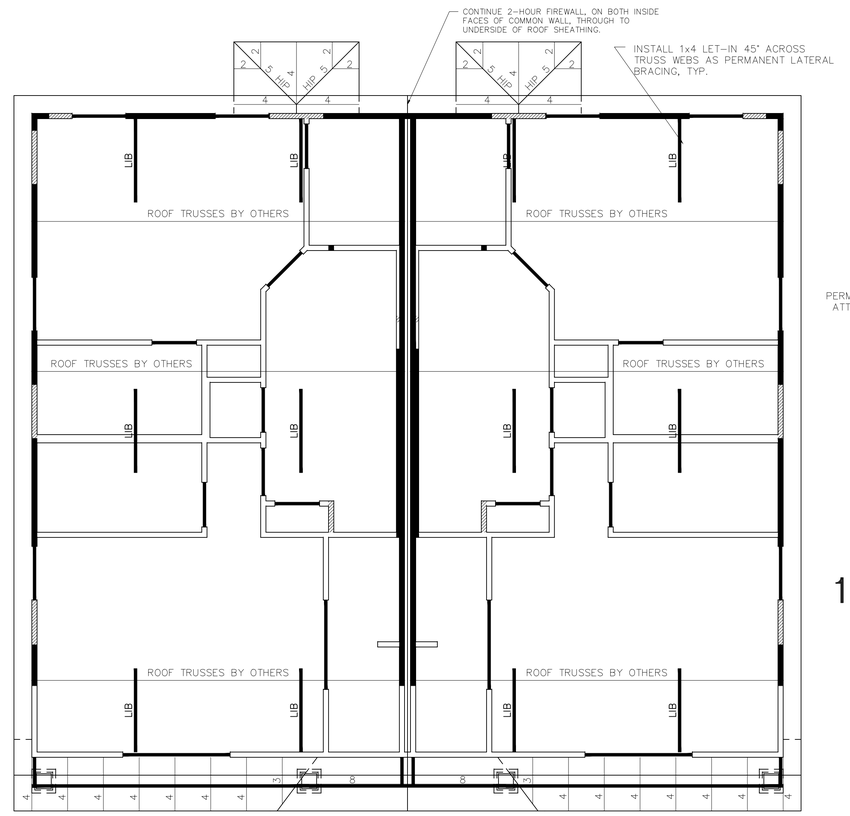

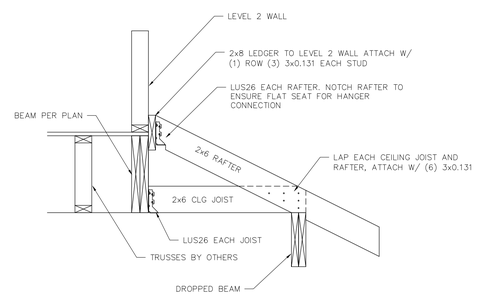

LOWER SHED ROOF CONNECTION DETAIL
N.T.S.

THIS PLAN IS VALID IN BELL, BEXAR, COMAL, HAYS, MCLENNAN, MILAM, TRAVIS, AND WILLIAMSON COUNTIES.

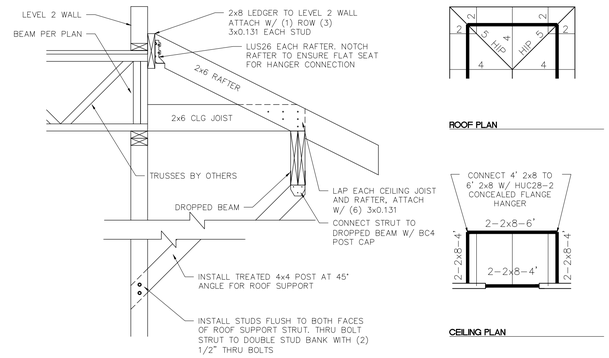

TYPICAL PATIO REAR PATIO ROOF CONNECTION DETAILS
N.T.S.

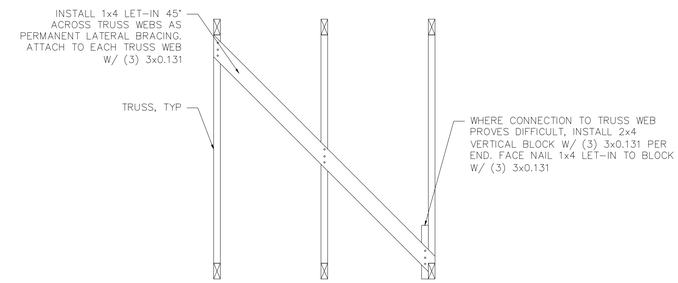

1 1x4 TRUSS BRACING DETAIL
N.T.S.

TREATED LUMBER NOTES:

ALL NAILS, SCREWS, HANGERS, ETC. INSTALLED WITH TREATED LUMBER TO COMPLY WITH APPROPRIATE ASTM STANDARDS. EG. FASTENERS TO COMPLY WITH ASTM A153, HANGERS TO COMPLY WITH ASTM A653, OR ASTM A123.

MLAW TO REVIEW TRUSS LAYOUT DESIGN FOR STRUCTURAL INTEGRITY INTERRELATED TO FRAMING DESIGN

LEGEND
ROOF BRACE
DEAD LOAD / LIVE LOAD — POINT LOAD
ENGINEERED BEAM
DOUBLE JOIST
WALL STACKED ON LOWER WALL
WALL STACKED ON LOWER BEAM

ROOF FRAMING
1/4" = 1'-0"

MLAW
CONSULTANTS AND ENGINEERS
2804 LONGHORN BLVD.
AUSTIN, TEXAS 78758
(512) 835-7000

PROPRIETOR
BRECKENRIDGE PROPERTIES
7004 BEE CAVE RD.
BLDG. 3, STE. 330
AUSTIN, TX 78746

CONTRACTOR
MERCK CONTRACTING
P.O. BOX 1105
WACO, TX 78703

KEYSTONE DUPLEX PLAN
ASPEN HEIGHTS TSU
201 COPPER BEECH DRIVE
SAN MARCOS, TX 78666
CLIENT: BRECKENRIDGE

JOB No:1012049053.201
DATE: 10-06-10
DRAWN: EE
CHECK:
A 12-16-10 FLR/RF TRUSSES EE
B 01-07-11 BARTOP WALLS EE

3
SHEET 3 OF 6

P:\2011\1175\hl\2011.10.13\Floor Plans\Keystone Duplex.dwg, 1:1

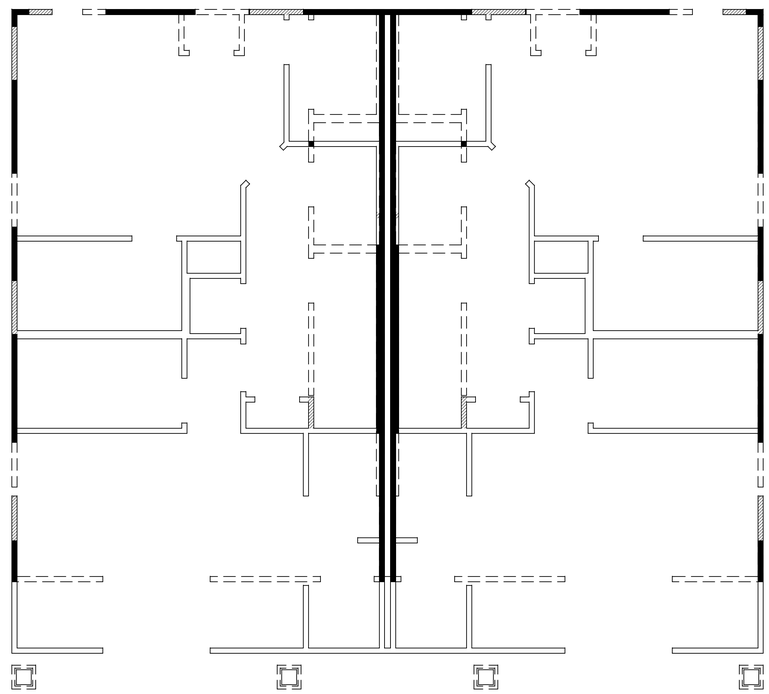

THIS PLAN IS VALID IN BELL, BEXAR, COMAL, HAYS, MCLENNAN, MILAM, TRAVIS, AND WILLIAMSON COUNTIES.

LEGEND

- LOWER LEVEL
- UPPER LEVEL
- WALL STACKED ON LOWER WALL
- WALL STACKED ON LOWER BEAM

OVERLAY
1/4" = 1'-0"

MLAW
CONSULTANTS AND ENGINEERS
2804 LONGHORN BLVD.
AUSTIN, TEXAS 78758
(512) 835-7000

PROPRIETOR
BRECKENRIDGE PROPERTIES
7004 BEE CAVE RD.
BLDG. 3, STE. 330
AUSTIN, TX 78746

CONTRACTOR
MERCK CONTRACTING
P.O. BOX 1105
WACO, TX 78703

KEYSTONE DUPLEX PLAN

ASPEN HEIGHTS TSU
201 COPPER BEECH DRIVE
SAN MARCOS, TX 78666

CLIENT: BRECKENRIDGE

JOB No:1012049053.201
DATE: 10-06-10
DRAWN: EE
CHECK:

A 12-16-10 FLR/RF TRUSSES EE
B 01-07-11 BARTOP WALLS EE

4

SHEET
4 OF 6

P:\2011\1175\in\2011.10.13\Floor Plans\Keystone Duplex.dwg, 1:1

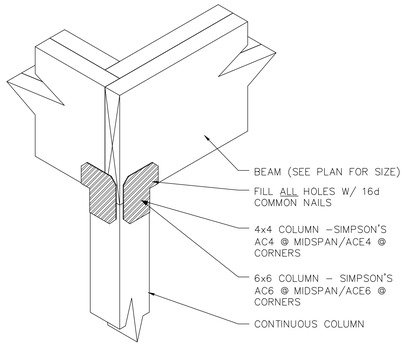

BEAM / COLUMN TOP CONNECTION
N.T.S.

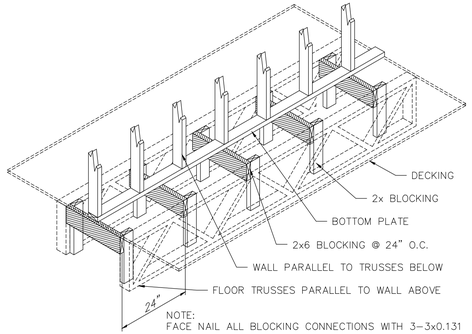

PARALLEL WALL/TRUSS BLOCKING
N.T.S.

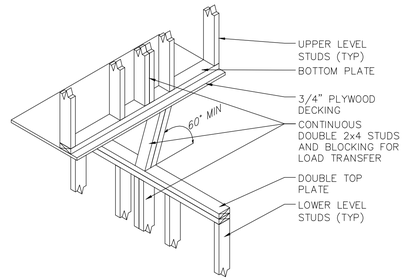

PERPENDICULAR STACKED WALL SUPPORT
N.T.S.

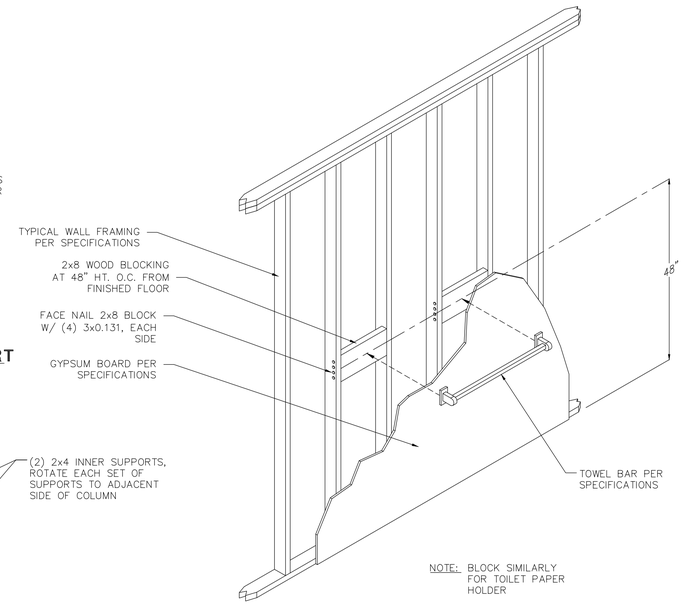

TYPICAL TOWEL BAR IN-WALL BLOCKING
N.T.S.

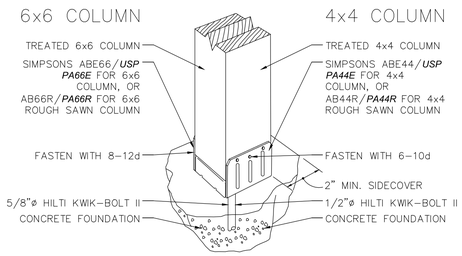

COLUMN BASE CONNECTION
N.T.S.

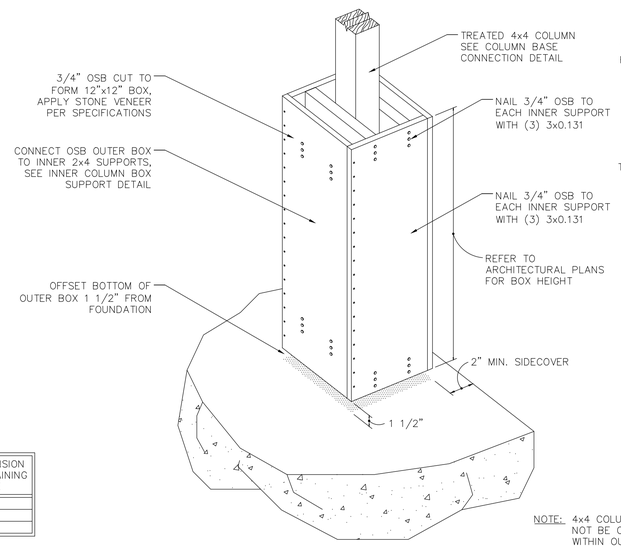

OUTER COLUMN BOX DETAIL
N.T.S.

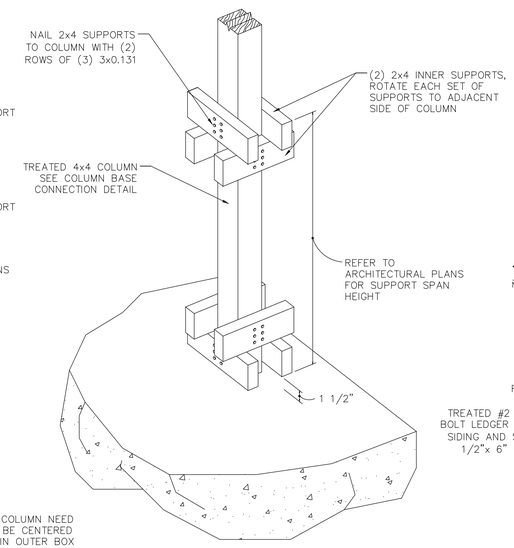

INNER COLUMN BOX SUPPORT DETAIL
N.T.S.

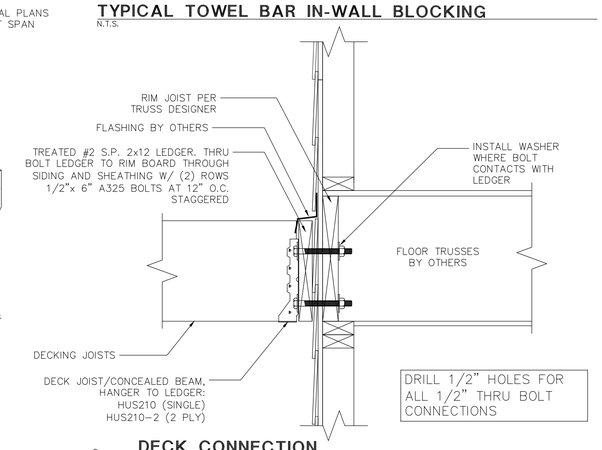

DECK CONNECTION
N.T.S.

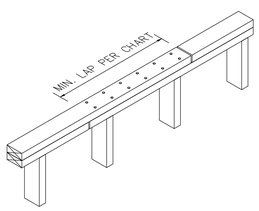

LENGTH OF TOP PLATE LAP @ SPLICE	BUILDING DIMENSION OF WALL CONTAINING TOP PLATE
4' LAP	≤ 40'
6' LAP	40' ≥ 60'
8' LAP	60' ≥ 80'

* TOP PLATE TO BE CONNECTED AT SPLICE W/ 2 ROWS OF 3x0.131 @ 4" O.C.(EACH SIDE @ INTERSECTION). SPLICES NEED NOT OCCUR OVER A STUD

TOP PLATE SPLICE DETAIL
N.T.S.

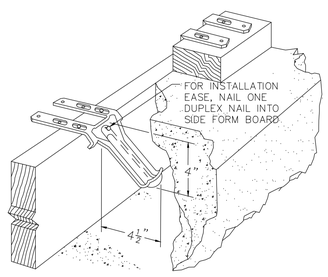

OPTIONAL ANCHOR BOLT ALTERNATIVE (CUT AWAY)
N.T.S.

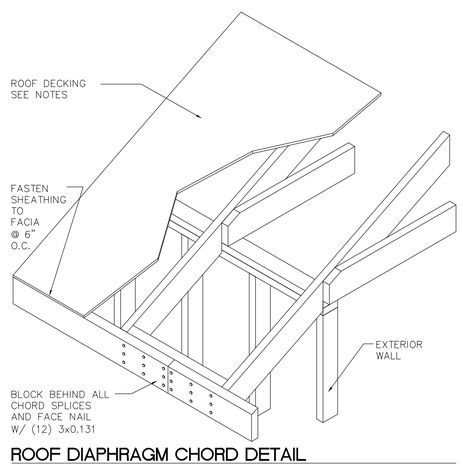

ROOF DIAPHRAGM CHORD DETAIL
SHEAR CAPACITY: 238 PLF

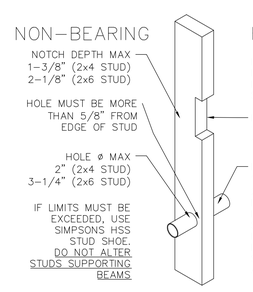

BORED/NOTCHED STUD
N.T.S.

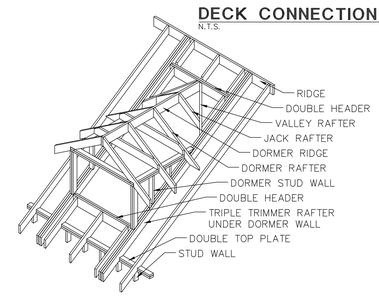

TYPICAL DORMER SUPPORT DETAIL
N.T.S.

THIS PLAN IS VALID IN BELL, BEXAR, COMAL, HAYS, MCLENNAN, MILAM, TRAVIS, AND WILLIAMSON COUNTIES.

MLAW
CONSULTANTS AND ENGINEERS
2804 LONGHORN BLVD.
AUSTIN, TEXAS 78758
(512) 835-7000

PROPRIETOR
BRECKENRIDGE PROPERTIES
7004 BEE CAVE RD.
BLDG. 3, STE. 330
AUSTIN, TX 78746

CONTRACTOR
MERCK CONTRACTING
P.O. BOX 1105
WACO, TX 76703

KEYSTONE DUPLEX PLAN
ASPEN HEIGHTS TSU
201 COPPER BEECH DRIVE
SAN MARCOS, TX 78666
CLIENT: BRECKENRIDGE

JOB No:1012049053.201
DATE: 10-06-10
DRAWN: EE
CHECK:
A 12-16-10 FLR/RF TRUSSES EE
B 01-07-11 BARTOP WALLS EE

FRAMING DETAILS
1/4" = 1'-0"

5
SHEET 5 OF 6

P:\2011175\Sh\2011.10.13\Floor Plans\Keystone Duplex.dwg, 1:1

FLOOR AND FLOOR JOISTS

UNLESS NOTED OTHERWISE ON PLAN (ALSO SEE MPCW FLOOR TRUSSES, WHERE APPLICABLE):

SPECIES AND GRADE: #2 SOUTHERN PINE U.N.O.

SIZE AND SPACING: 2x12 @ 24" O.C. U.N.O.

FLOOR SHEATHING: 3/4" TONGUE AND GROOVE SIZED FOR SPACING

FLOOR DECKING: FLAT 2x6 W/ 1/8" GAPS FOR EXTERIOR APPLICATIONS

1. **EXTERIOR DECKS.** REFER TO CONNECTION DETAILS PER PLAN.
2. **BEARING.** AT END OF EACH JOIST, BEAR A MINIMUM LENGTH OF 1-1/2". WHERE JOISTS FRAME FROM OPPOSITE SIDES OVER A BEARING SUPPORT, LAP MINIMUM 3" AND FASTEN. WHERE JOISTS FRAME INTO THE SIDE OF A GIRDER, USE JOIST HANGER IN ACCORDANCE WITH THE SCHEDULE.
3. **LATERAL RESTRAINT AT SUPPORTS.** LATERALLY SUPPORT JOISTS AT THE ENDS BY FULL DEPTH SOLID BLOCKING, ATTACHMENT TO A HEADER, BAND OR RIM JOIST, OR TO AN ADJOINING STUD.
4. **TOPPING SLABS.** DO NOT USE TOPPING SLABS UNLESS NOTED OTHERWISE ON PLAN.
5. **ALLOWABLE JOIST SPANS:**

RESIDENTIAL LIVING
IRC R502.3.1(2) LL=40 PSF, DL=10 PSF,
(LIGHT FLOOR COVERING)

Δ = L/360

#2 S.P.	2x6	2x8	2x10	2x12
12" O.C.	10'-9"	14'-2"	18'-0"	21'-9"
16" O.C.	9'-9"	12'-10"	16'-1"	18'-10"
19.2" O.C	9'-2"	12'-1"	14'-8"	17'-2"
24" O.C.	8'-6"	11'-0"	13'-1"	15'-5"

RESIDENTIAL SLEEPING
IRC R502.3.1(1) LL=30 PSF, DL=10 PSF,
(LIGHT FLOOR COVERING)

Δ = L/360

#2 S.P.	2x6	2x8	2x10	2x12
12" O.C.	11'-10"	15'-7"	19'-10"	24'-2"
16" O.C.	10'-9"	14'-2"	18'-0"	21'-1"
19.2" O.C.	10'-1"	13'-4"	16'-5"	19'-3"
24" O.C.	9'-4"	12'-4"	14'-8"	17'-2"

RESIDENTIAL LIVING
IRC R502.3.1(2) LL=40 PSF, DL=20 PSF,
(HEAVY FLOOR COVERING)

Δ = L/360

#2 S.P.	2x6	2x8	2x10	2x12
12" O.C.	10'-9"	14'-2"	16'-11"	19'-10"
16" O.C.	9'-6"	12'-4"	14'-8"	17'-2"
19.2" O.C	8'-8"	11'-3"	13'-5"	15'-8"
24" O.C.	7'-9"	10'-0"	12'-0"	14'-0"

RESIDENTIAL SLEEPING
IRC R502.3.1(1) LL=30 PSF, DL=20 PSF,
(HEAVY FLOOR COVERING)

Δ = L/360

#2 S.P.	2x6	2x8	2x10	2x12
12" O.C.	11'-10"	15'-7"	18'-7"	21'-9"
16" O.C.	10'-5"	13'-6"	16'-1"	18'-10"
19.2" O.C	9'-6"	12'-4"	14'-8"	17'-2"
24" O.C.	8'-6"	11'-0"	13'-1"	15'-5"

RESIDENTIAL LIVING
IRC R502.3.1(2) LL=40 PSF, DL=10 PSF,
(LIGHT FLOOR COVERING)

Δ = L/360

#3 S.P.	2x6	2x8	2x10	2x12
12" O.C.	9'-4"	11'-11"	14'-0"	16'-8"
16" O.C.	8'-1"	10'-3"	12'-2"	14'-6"
19.2" O.C.	7'-4"	9'-5"	11'-1"	13'-2"
24" O.C.	6'-7"	8'-5"	9'-11"	11'-10"

RESIDENTIAL SLEEPING
IRC R502.3.1(1) LL=30 PSF, DL=10 PSF,
(LIGHT FLOOR COVERING)

Δ = L/360

#3 S.P.	2x6	2x8	2x10	2x12
12" O.C.	10'-5"	13'-3"	15'-8"	18'-8"
16" O.C.	9'-0"	11'-6"	13'-7"	16'-2"
19.2" O.C	8'-3"	10'-6"	12'-5"	14'-9"
24" O.C.	7'-4"	9'-5"	11'-1"	13'-2"

RESIDENTIAL LIVING
IRC R502.3.1(2) LL=40 PSF, DL=20 PSF,
(HEAVY FLOOR COVERING)

Δ = L/360

#3 S.P.	2x6	2x8	2x10	2x12
12" O.C.	8'-6"	10'-10"	12'-10"	15'-3"
16" O.C.	7'-4"	9'-5"	11'-1"	13'-2"
19.2" O.C	6'-9"	8'-7"	10'-1"	12'-1"
24" O.C.	6'-0"	7'-8"	9'-1"	10'-9"

RESIDENTIAL SLEEPING
IRC R502.3.1(1) LL=30 PSF, DL=20 PSF,
(HEAVY FLOOR COVERING)

Δ = L/360

#3 S.P.	2x6	2x8	2x10	2x12
12" O.C.	9'-4"	11'-11"	14'-0"	16'-8"
16" O.C.	8'-1"	10'-3"	12'-2"	14'-6"
19.2" O.C.	7'-4"	9'-5"	11'-1"	13'-2"
24" O.C.	6'-7"	8'-5"	9'-11"	11'-10"

WOOD WALL FRAMING

1. **R601.2.1 COMPRESSIBLE MATERIALS.** MATERIALS THAT COMPRESS MORE THAN 1/32 INCH WHEN SUBJECTED TO 50 PSI SHALL NOT EXTEND BENEATH WALLS.
2. **R602.1.1 END JOINTED LUMBER.** APPROVED END JOINTED LUMBER MAY BE USED INTERCHANGABLY WITH SOLID-SAWN MEMBERS OF THE SAME SPECIES AND GRADE.
3. **R602.2 GRADE.** STUDS SHALL BE A MIN. #2, STANDARD OR STUD GRADE S.P.F.
4. **R602.3.1 STUD SIZE, HEIGHT, AND SPACING.**

MAX. ALLOWABLE LATERALLY UNSUPPORTED LENGTHS OF WOOD WALL STUDS FOR THE GIVEN STUD SIZE AND SPACING:

SUPPORTING ROOF ONLY	
2x4 @ 16" O.C.	12'-0"
2x6 @ 16" O.C.	18'-0"
2x6 @ 12" O.C.	20'-0"
2x6 @ 8" O.C.	24'-0"

SUPPORTING ONE FLOOR AND A ROOF	
2x4 @ 16" O.C.	10'-0"
2x6 @ 16" O.C.	18'-0"
2x6 @ 12" O.C.	20'-0"
2x6 @ 8" O.C.	24'-0"

SUPPORTING TWO FLOORS AND A ROOF	
2x6 @ 16" O.C.	14'-0"
2x6 @ 12" O.C.	16'-0"
2x6 @ 12" O.C.	18'-0"
2x6 @ 8" O.C.	20'-0"

5. **R602.3.2 TOP PLATE.** CAP WOOD STUD WALLS WITH A DOUBLE TOP PLATE INSTALLED TO PROVIDE OVERLAPPING AT CORNERS AND INTERSECTIONS WITH BEARING PARTITIONS. END JOINTS IN TOP PLATES SHALL BE OFFSET AT LEAST 24". JOINTS NEED NOT OCCUR OVER STUDS. PLATES TO BE SAME SIZE AS STUDS AND MIN UTILITY GRADE S.P.F.
6. **R602.6.1 DRILLING AND NOTCHING OF TOP PLATE.** WHEN TOP PLATE WIDTH IS REDUCED BY MORE THAN 50%, INSTALL SIMPSON RPS/USP ***KRPS*** TIES ACROSS THE NOTCH AND TO THE PLATE AT EACH SIDE OF THE OPENING WITH NOT LESS THAN EIGHT 16d NAILS AT EACH SIDE.
7. **BOTTOM PLATES.**
PLATES IN CONTACT WITH CONCRETE MUST BE PRESSURE TREATED IN ACCORDANCE WITH APPROVED STANDARDS AND SHALL BE ANCHORED TO CONCRETE BY THE FOLLOWING METHODS:
(a) EXTERIOR PLATES IN CONTACT WITH CONCRETE:
(i) 1/2" ANCHOR BOLTS, MIN. 7" EMBED SPACED 6'-0" ON CENTER, MAX. WITH 2.29x3x3 STEEL PLATE WASHERS BETWEEN THE BOTTOM PLATE AND NUT.
(ii) SIMPSON MAS/USP ***FA3*** MUDSILL ANCHORS INSTALLED PER MANUFACTURERS SPECIFICATIONS, AND SPACED 5' ON CENTER, MAX.
IF ONE OF THE ABOVE METHODS CANNOT BE PLACED BETWEEN 4" AND 12" FROM THE ENDS OF EACH PLATE SECTION, USE (2) SIMPSONS PDPWL-300(OR EQUAL) PLACED @ 6" AND 10" FROM EACH END OF SILL PLATES.
(b) INTERIOR NON-SHEARWALL PLATES IN CONTACT WITH CONCRETE SHALL BE ANCHORED TO CONCRETE W/ SIMPSONS PDPWL-300(OR EQUAL) @ 32" O.C.
(c) INTERIOR SHEARWALL PLATES SHALL BE ANCHORED TO CONCRETE W/ SIMPSONS PDPWL-300(OR EQUAL) @ 8" O.C., U.N.O.
(d) BOTTOM PLATES IN CONTACT WITH LUMBER TO BE FASTENED PER FASTENER SCHEDULE.
8. **PLATE HEIGHT.** UNLESS NOTED OTHERWISE, WALLS ARE PLATFORM FRAMED WHEREVER APPLICABLE. SEE ARCHITECTURAL DRAWINGS FOR EXACT DIMENSION AND STRUCTURAL DRAWINGS FOR ACCEPTABLE MAXIMUM. CONTACT ENGINEER IF DISCREPANCIES ARE FOUND.
9. **OPENINGS.** OPENINGS SHALL BE FRAMED WITH HEADER AND TRIMMER JOISTS. IF HEADER SPAN IS LESS THAN 4', THE HEADER MAY BE A SINGLE MEMBER THE SAME SIZE AS RAFTER. A SINGLE TRIMMER MAY BE USED TO CARRY A SINGLE HEADER THAT IS LOCATED WITHIN 3' OF TRIMMER BEARING. IF HEADER SPAN EXCEEDS 4', THE HEADER AND TRIMMERS SHALL BE DOUBLED AND JOIST HANGERS SHALL BE INSTALLED.
10. **UNEXPECTED CONDITIONS.** IF CONDITIONS ARISE THAT ARE NOT COVERED BY THIS PLAN, CONTACT THE ENGINEER AT ONCE FOR ADDITIONAL INSTRUCTIONS.

ENGINEERED BEAMS

1. **CAPACITY.**
(a) ALL SOLID SAWN LUMBER BEAMS/HEADERS LABELED ON PLAN AS 2x10 OR GREATER,TO BE #2 SOUTHERN PINE U.N.O.
(b) ALL STRUCTURAL COMPOSITE LUMBER USED IN CONSTRUCTION MUST HAVE THE FOLLOWING MINIMUM CAPACITIES:
FIBER BENDING (Fb) = 2600 PSI
MODULUS OF ELASTICITY (E) = 1,900,000 PSI
SHEAR STRENGTH (Fv) = 285 PSI
COMPRESSION PERPENDICULAR (Fc⊥) = 170 PSI
2. **SUPPORT.** FOR BEAMS BEARING ON STUD WALLS, THERE SHALL BE THE SAME NUMBER OF STUDS LOCATED DIRECTLY UNDER THE BEAM AS THE NUMBER OF BEAM PLYS.
3. **ELEVATION.** BEAMS SHOWN ON PLAN ARE DROPPED BEAMS OR HEADERS UNLESS NOTED AS CLD (CONCEALED) OR FLT (FLOATING).
4. **FLOATING BEAMS.** FLOATING BEAMS SHALL HAVE A MINIMUM CLEARANCE OF 1-1/2" FROM BOTTOM OF BEAM.
5. **LATERAL RESTRAINT.** ALL BEAMS SHALL BE LATERALLY BRACED AT ALL SUPPORT POINTS. FLOATING BEAMS SHOULD HAVE ADDITIONAL LATERAL SUPPORT AT 1/3 SPAN POINTS. ALL KICKERS SHOULD BE PLACED AT AN ANGLE BETWEEN 45° AND HORIZONTAL.
6. **SUBSTITUTIONS.** GLU-LAM BEAMS OR OTHER APPROVED ENGINEERED STRUCTURAL COMPOSITE LUMBER MAY BE SUBSTITUTED FOR BEAMS NOTATED ON PLAN, PROVIDED THAT THE STRENGTH VALUES ARE EQUAL TO OR GREATER THAN THE VALUES LISTED ABOVE.

CEILING AND CEILING JOISTS

1. **LOADING.** ATTIC AREAS ARE DESIGNED AS UNINHABITABLE WITH LIMITED STORAGE (MAXIMUM LIVE LOAD = 20 PSF, DEAD LOAD = 10 PSF)
2. **R802.3.1 CEILING JOIST CONNECTIONS.** WHERE CEILING JOISTS FRAME FROM OPPOSITE SIDES OVER A BEARING SUPPORT, JOISTS SHALL BE LAPPED 3" AND FASTENED. WHERE JOISTS ARE NOT CONNECTED TO RAFTERS AT THE TOP PLATE, JOISTS SHALL BE INSTALLED HIGHER IN THE ATTIC TO PROVIDE A CONTINUOUS TIE. WHERE JOISTS ARE NOT PARALLEL TO RAFTERS, 2x4 RAFTER TIES SHALL BE INSTALLED
3. **BEARING.** AT END OF EACH JOIST, BEAR A MINIMUM LENGTH OF 1-1/2". WHERE JOISTS FRAME FROM OPPOSITE SIDES OVER A BEARING SUPPORT, LAP MINIMUM 3". WHERE JOIST FRAME INTO THE SIDE OF A GIRDER, USE SIMPSON HANGER IN ACCORDANCE WITH THE SCHEDULE.
4. **R802.8 LATERAL SUPPORT.** RAFTERS AND CEILING JOISTS 2x10 OR GREATER SHALL BE PROVIDED WITH LATERAL SUPPORT AT BEARING POINTS TO PREVENT ROTATION. SUPPORT JOISTS BY SOLID BLOCKING AT SUPPORT POINTS, DIAGONAL BRIDGING, OR A CONTINUOUS 1x4 RAT RUN NAILED ACROSS JOISTS AT INTERVALS NOT EXCEEDING 8'.
5. **STABILITY OF NONBEARING WALLS.** WHERE CEILING JOISTS ARE PARALLEL TO NONBEARING WALL, BRACE TOP OF WALL WITH 2x4 BLOCKING AT 24" O.C. BETWEEN JOISTS.
6. **R802.9 FRAMING OF OPENINGS.** OPENINGS IN ROOF AND CEILING FRAMING SHALL BE FRAMED WITH DOUBLE HEADER AND DOUBLE TRIMMER JOISTS.
7. **MECHANICAL EQUIPMENT SUPPORT.** IF NOT DESIGNATED ON PLAN, ALL MECHANICAL EQUIPMENT AND WATER HEATERS SHALL BE SUPPORTED BY MIN. DOUBLE 2x10 JOISTS @ 24" O.C.
8. **R301.5 LIVE LOADS.** TABLE R301.5b ATTICS WITHOUT STORAGE ARE THOSE WHERE THE MAXIMUM CLEAR HEIGHT BETWEEN JOIST AND RAFTER IS LESS THAN 42".
9. **R807.1 ATTIC ACCESS.** A ROUGH FRAMED OPENING NOT LESS THAN 22"x30" SHALL BE PROVIDED TO ATTIC AREAS THAT EXCEED 30 SQUARE FEET AND HAVE A VERTICAL HEIGHT OF 30" OR MORE.
10. **R802.4 ALLOWABLE CEILING JOIST SPANS.** SPANS FOR CEILING JOISTS SHALL BE IN ACCORDANCE WITH TABLES R802.4(1) AND R802.4(2)

IRC R802.4(2) LL=20 PSF, DL=10 PSF,
(LIMITED STORAGE)

Δ = L/240

#2 S.P.	2x6	2x8	2x10	2x12
12" O.C.	15'-6"	20'-1"	23'-11"	26'-0"
16" O.C.	13'-6"	17'-5"	20'-9"	24'-4"
19.2" O.C	12'-3"	15'-10"	18'-11"	22'-2"
24" O.C.	11'-0"	14'-2"	16'-11"	19'-10"

IRC R802.4(2) LL=20 PSF, DL=10 PSF,
(LIMITED STORAGE)

Δ = L/240

#3 S.P.	2x6	2x8	2x10	2x12
12" O.C.	12'-0"	15'-4"	18'-1"	21'7"
16" O.C.	10'-5"	13'-3"	15'-8"	18'-8"
19.2" O.C	9'-6"	12'-1"	14'-4	17'-1
24" O.C.	8'-6"	10'-10"	12'-10"	15'-3"

JOIST AND BEAM HANGERS

1. HANGERS MUST BE INSTALLED USING THE SPECIFIED FASTENERS IN ALL HOLES, INCLUDING TRIANGULAR HOLES.
2. ALL SPECIFIED FASTENERS MUST BE INSTALLED PRIOR TO LOADING THE CONNECTION.
3. TECO NAILS SHOULD ONLY BE POWER DRIVEN USING PNUEMATIC TOOLS CAPABLE OF SUPPORTING POSITIVE PLACEMENT MECHANISM TO ENSURE NAILS ARE DRIVEN INTO PREFORMED HANGER NAIL HOLES.
4. TECO NAILS MAY NOT BE SUBSTITUTED FOR COMMON NAILS IN DOUBLE SHEAR HANGERS (i.e. LUS, MUS, HUS, HHUS, HGUS)
5. JOISTS MUST BEAR COMPLETELY ON CONNECTOR SEAT, AND THE GAP BETWEEN JOIST AND GIRDER MUST NOT EXCEED 1/8".

FACE MOUNT HANGER SCHEDULE

MEMBER	SIMPSONS PRODUCT NUMBER	CAPACITY (100%)	*USP PRODUCT NUMBER*	*CAPACITY (100%)*
2x4	LU24	530	*JL24*	*545*
2x6, 8	LU26	800	*JL26*	*815*
2x10	LU28	1065	*JL28*	*1360*
2x12	LU210	1330	*JL210*	*1905*
2-2x4	U24-2	530	*SUH24-2*	*830*
2-2x6, 8	U26-2	1065	*SUH26-2*	*1380*
2-2x10, 12	U210-2	1860	*SUH210-2*	*1930*
2-1.75x11.25	HGUS48	6805	*THDH410*	*8170*
2-1.75x14, 16	HGUS410	8780	*THDH412*	*9875*
2-1.75x18	HGUS414	10015	*THDH414*	*11100*
3-2x10, 12	U210-3	1860	*SUH210-3*	*1930*
3-1.75x11.25	HGUS5.50/12	9155	*THDH610*	*8640*
3-1.75x14-18	HGUS5.50/14	10015	*THDH612*	*9935*
4-2x10, 12	HHUS210-4	5190	*HD210-4*	*3360*
4-1.75x11.25	HGUS7.25/12	9835	*THDH7212*	*9875*
4-1.75x14-18	HGUS7.25/14	11110	*THDH7214*	*11580*
ALL 5 PLY LVL	HHGU9.00-SDS	17845	*KEG9*	*18185*
45° SKEWED HANGERS				
2x4	SUR/L24	530	*SKH24R/L*	*510*
2x6, 8	SUR/L26	800	*SKH26R/L*	*830*
2x10, 12	SUR/L210	1330	*SHK210R/L*	*1790*
2-2x6, 8	SUR/L26-2	1065	*SKH26R/L-2*	*830*
2-2x10, 12	SUR/L210-2	1860	*SKH210R/L-2*	*1930*
2-1.75x11.25, 14	HSUR/L410	2680	*SKH410R/L*	*2240*
2-1.75x16, 18	HSUR/L414	3485	*SKH414R/L*	*3080*

ROOF AND RAFTERS

1. **ROOFING MATERIAL AND MAXIMUM WEIGHT.** COMPOSITION ROOF COVERING NOT TO EXCEED 5 PSF. TILE ROOF COVERING NOT TO EXCEED 15 PSF. CONTACT ENGINEER AT ONCE IF DISCREPANCIES ARE FOUND.
2. **R802.3.1 CEILING JOIST AND RAFTER CONNECTIONS.** FASTEN CEILING JOISTS AND RAFTERS TOGETHER AND TO THE WALL TOP PLATE. CREATE CONTINUITY FROM ONE SIDE OF ROOF TO OPPOSITE BY NAILING RAFTERS TO ADJACENT CEILING JOISTS. MIN. 1x4 COLLAR TIES @ 48" O.C. SHALL BE FASTENED TO OPPOSING RAFTERS IN THE UPPER THIRD OF THE ATTIC. WHERE RAFTER/JOIST ASSEMBLY IS EXPOSED TO WIND LOADS FROM BELOW, SUCH AS PORCHES AND PATIOS, CONNECT EACH ASSEMBLY TO BEARING LOCATION WITH SIMPSON H2.5/USP RT7 HURRICANE TIE.
3. **ROOF BRACES.** BRACE ONLY AS SHOWN AND PROVIDE TWO STUDS IN WALLS DIRECTLY BENEATH BRACE POINTS. FOR BRACE LENGTHS UP TO 12', USE A 2x4 BRACE WITH A 2x6 STIFFBACK. FOR GREATER THAN 12', USE A 2x6 WITH A 2x6 STIFFBACK.
4. **R802.5.1 PURLINS.** PURLINS SHALL BE INSTALLED WHERE SHOWN ON PLAN. PURLINS SHALL BE CONTINUOUS, THE SAME SIZE AS THE SUPPORTED RAFTERS AND BRACED AT 48" O.C. TO DESIGNATED LOCATIONS. SLOPE BETWEEN 45° AND VERTICAL.
5. **R802.5 ALLOWABLE RAFTER SPANS.** SPANS FOR RAFTERS SHALL BE IN ACCORDANCE WITH TABLES R802.5.1(1) AND R802.5.1(2). SHOWN TABLES ASSUME CEILING JOISTS ARE LOCATED AT THE TOP PLATE OF RAFTER SUPPORT WALLS.
6. **OPENINGS.** OPENINGS SHALL BE FRAMED WITH HEADER AND TRIMMER JOISTS. IF HEADER SPAN IS LESS THAN 4', THE HEADER MAY BE A SINGLE MEMBER THE SAME SIZE AS RAFTER. A SINGLE TRIMMER MAY BE USED TO CARRY A SINGLE HEADER THAT IS LOCATED WITHIN 3' OF TRIMMER BEARING. IF HEADER SPAN EXCEEDS 4', THE HEADER AND TRIMMERS SHALL BE DOUBLED AND JOIST HANGERS SHALL BE INSTALLED.

IRC R802.5.1(1) LL=20 PSF, DL=10 PSF,
(NOT ATTACHED TO CEILING)

Δ = L/180

#2 S.P.	2x6	2x8	2x10	2x12
12" O.C.	17'-0"	22'-5"	26'-0"	26'-0"
16" O.C.	15'-1"	19'-5"	23'-2"	26'-0"
19.2" O.C	13'-9"	17'-9"	21'-2"	24'-10"
24" O.C.	12'-3"	15'-10"	18'-11"	22'-2"

IRC R802.5.1(2) LL=20 PSF, DL=10 PSF,
(ATTACHED TO CEILING)

Δ = L/240

#2 S.P.	2x6	2x8	2x10	2x12
12" O.C.	15'-6"	20'-5"	26'-0"	26'-0"
16" O.C.	14'-1"	18'-6"	23'-2"	26'-0"
19.2" O.C	13'-3"	17'-5"	21'-2"	24'-10"
24" O.C.	12'-3"	15'-10"	18'-11"	22'-2"

IRC R802.5.1(1) LL=20 PSF, DL=20 PSF,
(NOT ATTACHED TO CEILING)

Δ = L/180

#2 S.P.	2x6	2x8	2x10	2x12
12" O.C.	15'-1"	19'-5"	23'-2"	26'-0"
16" O.C.	13'-6"	16'-10"	20'-1"	23'-7"
19.2" O.C	11'-11"	15'-4"	18'-4"	21'-6"
24" O.C.	10'-8"	13'-9"	16'-5"	19'-3"

IRC R802.5.1(2) LL=20 PSF, DL=20 PSF,
(ATTACHED TO CEILING)

Δ = L/240

#2 S.P.	2x6	2x8	2x10	2x12
12" O.C.	15'-1"	19'-5"	23'-2"	26'-0"
16" O.C.	13'-6"	16'-10"	20'-1"	23'-7"
19.2" O.C	11'-11"	15'-4"	18'-4"	21'-6"
24" O.C.	10'-8"	13'-9"	16'-5"	19'-3"

IRC R802.5.1(1) LL=20 PSF, DL=10 PSF,
(NOT ATTACHED TO CEILING)

Δ = L/180

#3 S.P.	2x6	2x8	2x10	2x12
12" O.C.	13'-6"	17'-2"	20'-3"	24'-1"
16" O.C.	11'-8"	14'-10"	17'-6"	20'-11"
19.2" O.C	10'-8"	13'-7"	16'-0"	19'-1"
24" O.C.	9'-6"	12'-1"	14'-4"	17'-1"

IRC R802.5.1(2) LL=20 PSF, DL=10 PSF,
(ATTACHED TO CEILING)

Δ = L/240

#3 S.P.	2x6	2x8	2x10	2x12
12" O.C.	13'-6"	17'-2"	20'-3"	24'-1"
16" O.C.	11'-8"	14'-10"	17'-6"	20'-11"
19.2" O.C	10'-8"	13'-7"	16'-0"	19'-1"
24" O.C.	9'-6"	12'-1"	14'-4"	17'-1"

IRC R802.5.1(1) LL=20 PSF, DL=20 PSF,
(NOT ATTACHED TO CEILING)

Δ = L/180

#3 S.P.	2x6	2x8	2x10	2x12
12" O.C.	11'-8"	14'-10"	17'-6"	20'-11"
16" O.C.	10'-1"	12'-10"	15'-2"	18'-1"
19.2" O.C	9'-3"	11'-9"	13'-10"	16'-6"
24" O.C.	8'-3"	10'-6"	12'-5"	14'-9"

IRC R802.5.1(2) LL=20 PSF, DL=20 PSF,
(ATTACHED TO CEILING)

Δ = L/240

#3 S.P.	2x6	2x8	2x10	2x12
12" O.C.	11'-8"	14'-10"	17'-6"	20'-11"
16" O.C.	10'-1"	12'-10"	15'-2"	18'-1"
19.2" O.C	9'-3"	11'-9"	13'-10"	16'-6"
24" O.C.	8'-3"	10'-6"	12'-5"	14'-9"

FASTENER SCHEDULE

DESCR OF BUILDING ELEMENTS	***NUMBER AND TYPE OF FASTENER***
WALL FRAMING	
TOP OR SOLE PLATE TO STUD FACE NAIL	3-3x0.131
TOP OR SOLE PLATE TO STUD TOE NAIL	4-3x0.131
DOUBLE TOP PLATE MIN 24" LAP OF END JOINTS, FACE NAIL	8-3x0.131
CAP/TOP PLATE LAPS AND INTERSECTIONS, FACE NAIL	3-3x0.131 EACH SIDE
1x4 BRACING TO STUDS/PLATES FACE NAIL	2-3x0.131
SOLE PLATE TO JOIST OR BLOCKING	3x0.131
@ BRACED PANELS, FACE NAIL	4 PER 16" SPACE
SOLE PLATE TO JOIST OR BLOCKING FACE NAIL	3x0.131 @ 8" O.C.
DOUBLE TOP PLATE, FACE NAIL	3x0.131 @ 12" O.C.
DOUBLE STUDS, FACE NAIL	3x0.131 @ 8" O.C.
CORNER STUDS, FACE NAIL	3x0.131 @ 16" O.C.
HEADER TO KING STUD, TOE NAIL	4-3x0.131
CEILING AND ROOF FRAMING	
CEILING JOIST TO PLATE TOE NAIL	5-3x0.131
CEILING JOIST LAPS OVER WALLS FACE NAIL	4-3x0.131
CEILING JOIST TO PARALLEL RAFTER FACE NAIL	4-3x0.131
COLLAR TIE TO RAFTER, FACE NAIL	4-3x0.131
JACK RAFTER TO HIP, TOE NAIL	4-3x0.131
JACK RAFTER TO HIP, FACE NAIL	3-3x0.131
RAFTER TO TOP PLATE, TOE NAIL	3-3x0.131
RAFTER TO 2x RIDGE, FACE NAIL	3-3x0.131
RAFTER TO 2x RIDGE, TOE NAIL	3-3x0.131
BLOCKING BETWEEN RAFTER TO TOP PLATE, TOE NAIL	4-3x0.131
FLOOR FRAMING	
FLOOR JOIST TO BAND JOIST FACE NAIL	5-3x0.131
FLOOR JOIST TO SILL PLATE TOE NAIL	4-3x0.131
BLOCKING BETWEEN FLOOR JOIST TO SILL PLATE, TOE NAIL	4-3x0.131
BRIDGING TO FLOOR JOIST EACH END, TOE NAIL	3-3x0.120
RIM JOIST TO TOP PLATE, TOE NAIL	3x0.131 @ 6" O.C.
1x6 SUBFLOOR OR LESS TO EACH JOIST, FACE NAIL	2-3x0.131
2x SUBFLOOR TO EACH JOIST, BLIND AND FACE NAIL	3-3x0.131
BUILT UP GIRDERS AND BEAMS FACE NAIL	3x0.131 @ 24" O.C.T&B & 3-3x0.131 @ ENDS

SHEATHING FASTENING REQUIREMENTS

ROOF SHEATHING	
5/16"-1"	REFER TO COMPONENTS AND CLADDING REQUIREMENTS ON UPLIFT DETAILS PAGE.
WALL SHEATHING	
1/2" OR LESS	1-3/4"x16 GA. STAPLES 6" O.C. EDGE, 12" O.C. FIELD
19/32"-5/8"	1-3/4"x16 GA. STAPLES 3" O.C. EDGE, 6" O.C. FIELD
3/4"	1-3/4"x16 GA. STAPLES 3" O.C. EDGE, 6" O.C. FIELD
FLOOR SHEATHING	
3/4"	1-3/4"x16 GA. STAPLES 3" O.C. EDGE, 6" O.C. FIELD

1. THIS FASTENING SCHEDULE DERIVED FROM ICC EVALUATION SERVICE, INC. LEGACY REPORT #NER-272 REVISION A, DATED AUGUST 1, 2004
2. THIS FASTENING SCHEDULE APPLIES TO FRAMING MEMBERS HAVING AN ACTUAL THICKNESS OF 1-1/2" TO 1-3/4"
3. FASTENINGS ABOVE MAY ALSO BE USED FOR OTHER CONNECTIONS THAT ARE NOT LISTED BUT HAVE THE SAME CONFIGURATION AND THE SAME CODE REQUIREMENT FOR FASTENER QUANITY/SPACING AND FASTENER SIZE.
4. STAPLE CROWNS SHALL HAVE A MINIMUM WIDTH OF 7/16" OVERALL

MWFRS (MAIN WIND FORCE RESISTING SYSTEM)

1. AN ENGINEERED LATERAL BRACING DESIGN HAS BEEN PROVIDED FOR THIS PLAN. REFER TO LATERAL BRACING PAGES AND DETAILS FOR CONSTRUCTION DETAILS.
2. WALLS SHOWN IN CONTINUOUS LINETYPE ON LATERAL BRACING PAGES ARE SHEARWALLS THAT HAVE BEEN ENGINEERED TO RESIST WIND LOADS BASED ON ASCE 7-05 "THE STANDARD"
3. LIB'S SHOWN ON PLAN ARE IN APPROXIMATE LOCATIONS THESE MAY BE MOVED UP TO THREE FEET ALONG SAME SHEAR LINE, WHERE CONDITIONS ALLOW.
4. WALLS SHOWN IN HIDDEN LINETYPE ON LATERAL BRACING PAGES ARE NON-SHEARWALLS AND ARE NOT INTENDED TO PROVIDE RESISTANCE TO WIND LOADS.
5. ROOF AND FLOOR WOOD DIAPHRAGMS HAVE BEEN DESIGNED WITH SUFFICIENT CAPACITY TO TRANSFER ALL WIND LOAD TO ADJACENT SHEARWALLS.
6. MAIN WIND FORCE RESISTING SYSTEM DESIGNED PER LOCAL CONSTRUCTION STANDARDS, IRC/IBC 2006 AND ACCEPTED ENGINEERING PRACTICE.

MPCW FLOOR TRUSSES

1. **CRITERIA.** DESIGN TRUSSES FOR THE MINIMUM LINE AND POINT LOADS SHOWN ON PLAN (LINE LOADS FROM UPPER WALLS ARE MINIMUM 100 LB/FT U.N.O.)
2. **BRACING.** RESTRAIN TOP CHORD WITH FLOOR SHEATHING AND BOTTOM CHORD WITH CEILING GYPSUM . RESTRAIN TRUSSES AT POINTS OF BEARING TO PREVENT TOPPLING.
3. **TRANSITORY FLOOR VIBRATION AND SOUND TRANSMISSION.** THE FLOOR SYSTEM INCLUDES NO MEASURES TO SPECIFICALLY CONTROL FLOOR VIBRATION OR SOUND TRANSMISSION. CONTACT ENGINEER PRIOR TO CONSTRUCTION IF SPECIFIC PERFORMANCE CRITERIA ARE DESIRED.
5. **POINT LOADS ON FLOOR SYSTEM.** PROVIDE BLOCKING FROM UNSUPPORTED POINT LOADS ON FLOOR SYSTEM TO SUPPORT BELOW. BLOCKING MAY BE ANGLED MIN 60° FROM HORIZONTAL.

GENERAL

1. ALL DESIGNS BASED ON IRC 2006 COMPLIANCES.
2. GRADE MARKS ON ALL LUMBER SHALL BE VISIBLE AT TIME OF INSPECTION.
3. DO NOT USE END JOINTED LUMBER FOR HORIZONTAL FRAMING MEMBERS.
4. ALL CONNECTIONS TO BE FASTENED PER FASTENING SCHEDULE AND FRAMING DETAILS.
5. ALL FRAMING CREATING CONCENTRATED LOADS TO BE INSTALLED EXACTLY IN THE LOCATIONS SHOWN ON PLAN TO PROVIDE A CONTINUOUS LOAD TRANSFER PATH TO CONCRETE.
6. THESE PLANS ARE COPY

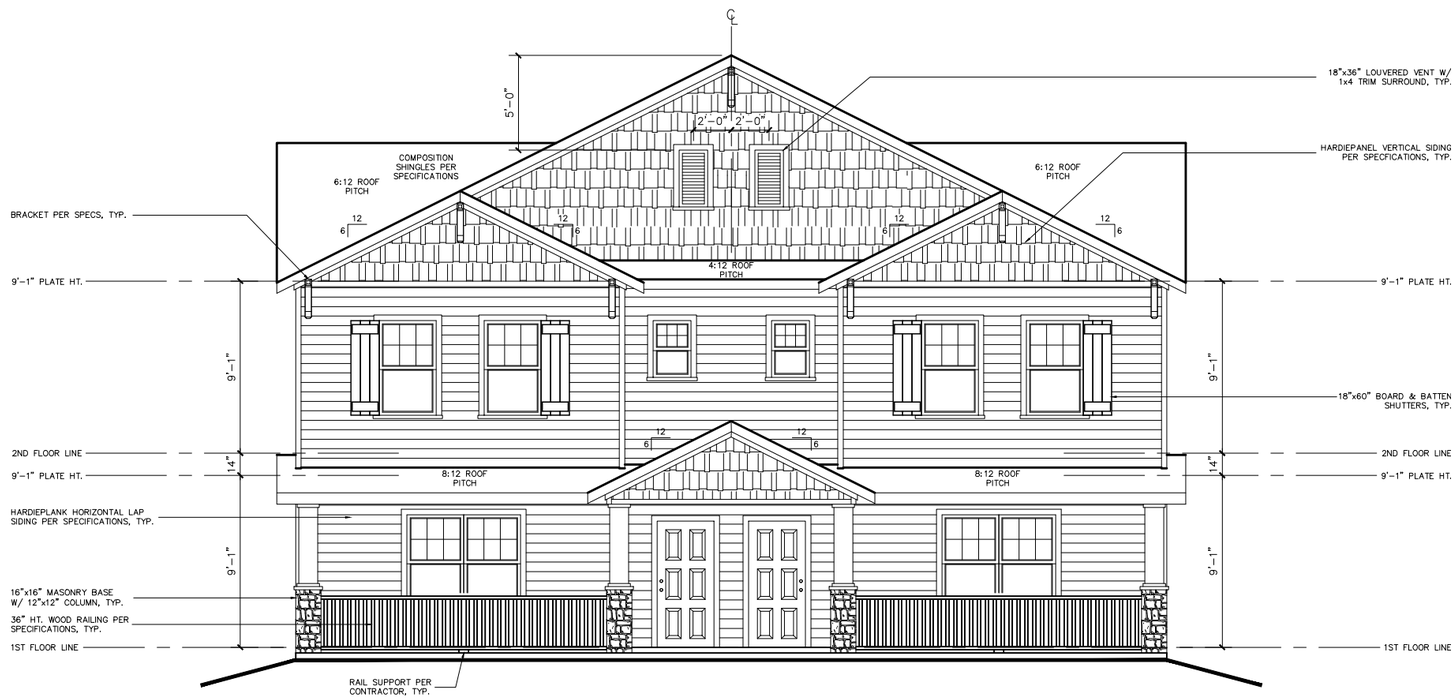

FRONT ELEVATION

P:\20111175\in\2011.10.13\Elevations\Telluride Duplex.dwg, 1:96

REAR ELEVATION

P:\20111175\In\2011.10.13\Elevations\Telluride Duplex.dwg, 1:96

LEFT ELEVATION

P:\20111175\In\2011.10.13\Elevations\Telluride Duplex.dwg, 1:96

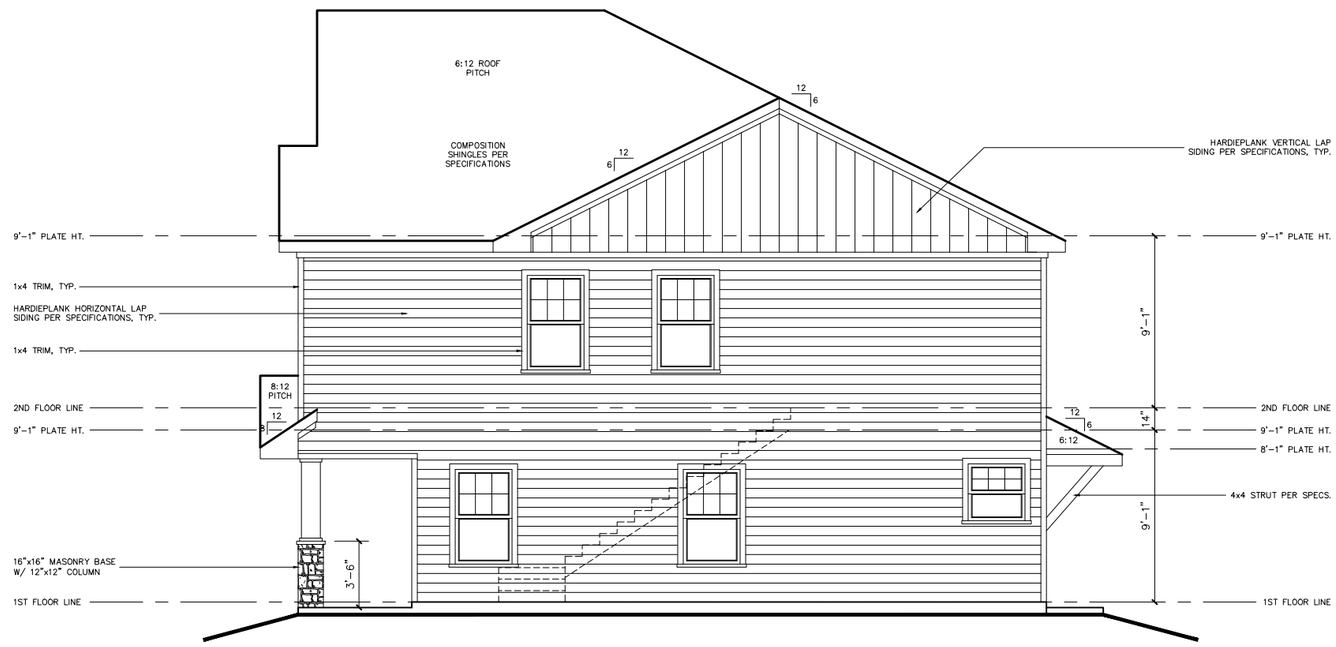

RIGHT ELEVATION

P:\20111175\In\2011.10.13\Elevations\Telluride Duplex.dwg, 1:96

CEILING AND CEILING JOISTS

SPECIES AND GRADE: #3 S.P. FOR SPANS UNDER 8' U.N.O.
#2 S.P. FOR SPANS OVER 8' U.N.O.
SIZE AND SPACING: 2x6 @ 24" O.C. U.N.O.
CEILING SHEATHING: 1/2" GYPSUM PANELS

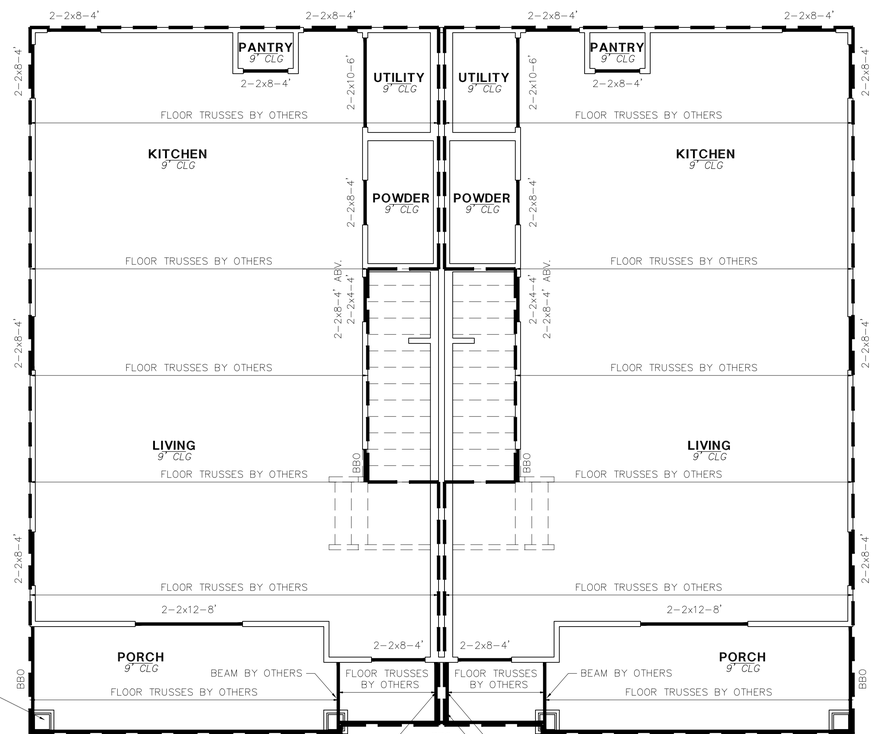

INSTALL TREATED 4x4 POST WITH SIMPSON'S AB44 POST BASE AND SIMPSON'S AC4/ACE4 POST CAP – BOTH PER ASTM A653, TYP

NOTE:
SEPERATE BEAMS MUST BE INSTALLED TO ENSURE PROPER FUNCTIONALITY OF FIRE-WALL AND ALL APPLICABLE CODES.

HEADER NOTES:

HEADERS BELOW FLOOR SYSTEM HAVE NOT BEEN DESIGNED TO SUPPORT CONCENTRATED LOADS IMPOSED FROM ABOVE. FLOOR SYSTEM DESIGNER TO DETERMINE HEADER SIZE FOR ALL HEADERS SUPPORTING CONCENTRATED LOADS. NON-LOAD BEARING HEADERS MAY BE FRAMED WITH FLAT 2x4. REFER TO TRUSS DESIGN TO DETERMINE LOAD BEARING POINTS.

TREATED LUMBER NOTES:

ALL NAILS, SCREWS, HANGERS, ETC. INSTALLED WITH TREATED LUMBER TO COMPLY WITH APPROPRIATE ASTM STANDARDS. EG. FASTENERS TO COMPLY WITH ASTM A153, HANGERS TO COMPLY WITH ASTM A653, OR ASTM A123.

MLAW TO REVIEW TRUSS LAYOUT DESIGN FOR STRUCTURAL INTEGRITY INTERRELATED TO FRAMING DESIGN

THIS PLAN IS VALID IN BELL, BEXAR, COMAL, HAYS, MCLENNAN, MILAM, TRAVIS, AND WILLIAMSON COUNTIES.

LEGEND

- DEAD LOAD / SOURCE / LIVE LOAD
- POINT LOAD
- LINE LOAD
- ENGINEERED BEAM
- L/XXX L/XXX D.L=X.XX T.L=X.XX DEFLECTION CRITERIA
- FLOOR FRAMING EXTENTS
- DOUBLE CEILING JOIST
- TJI FLOOR JOIST
- CEILING LINE

LEVEL 1 CEILING FRAMING
1/4" = 1'-0"

MLAW
CONSULTANTS AND ENGINEERS
2804 LONGHORN BLVD.
AUSTIN, TEXAS 78758
(512) 835-7000

PROPRIETOR
BRECKENRIDGE PROPERTIES
7004 BEE CAVE RD.
BLDG. 3, STE. 330
AUSTIN, TX 78746

CONTRACTOR
MERCK CONTRACTING
P.O. BOX 1105
WACO, TX 78703

TELLURIDE DUPLEX PLAN

ASPEN HEIGHTS TSU
201 COPPER BEECH DRIVE
SAN MARCOS, TX 78666

CLIENT: BRECKENRIDGE

JOB No:1012049054.201
DATE: 10-06-10
DRAWN: EE
CHECK:

A 12-16-10 FLR/RF TRUSSES EE
B 01-07-11 BARTOP WALLS EE

1
SHEET 1 OF 6

P:\2011\1175\W\2011.10.13\Floor Plans\Telluride Duplex.dwg, 1:1

CEILING AND CEILING JOISTS

SPECIES AND GRADE: #3 S.P. FOR SPANS UNDER 8' U.N.O.
#2 S.P. FOR SPANS OVER 8' U.N.O.
SIZE AND SPACING: 2x6 @ 24" O.C. U.N.O.
CEILING SHEATHING: 1/2" GYPSUM PANELS

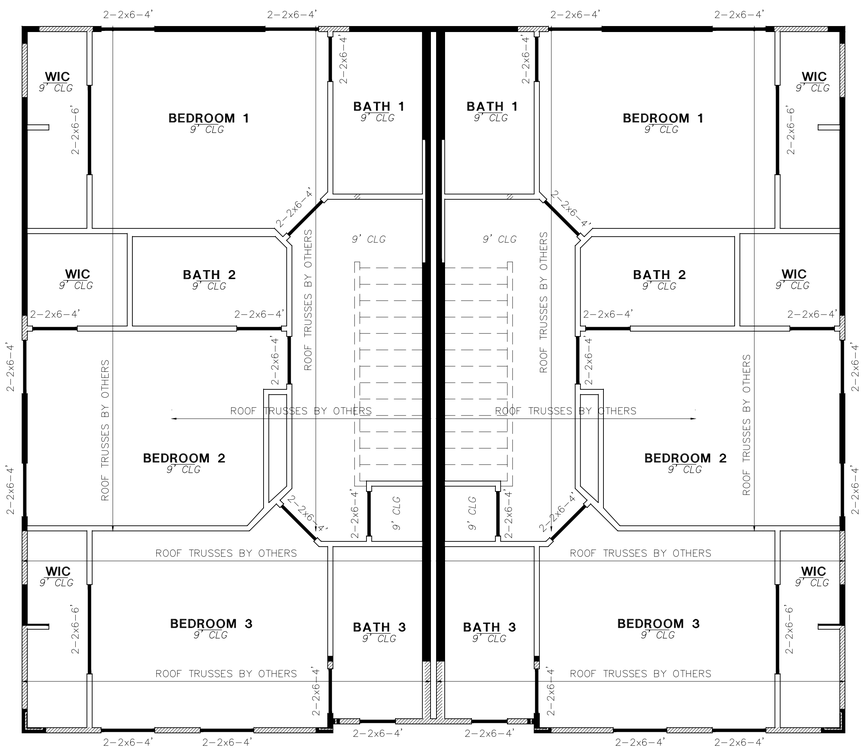

HEADER NOTES:

HEADERS BELOW FLOOR SYSTEM HAVE NOT BEEN DESIGNED TO SUPPORT CONCENTRATED LOADS IMPOSED FROM ABOVE. FLOOR SYSTEM DESIGNER TO DETERMINE HEADER SIZE FOR ALL HEADERS SUPPORTING CONCENTRATED LOADS. NON-LOAD BEARING HEADERS MAY BE FRAMED WITH FLAT 2x4. REFER TO TRUSS DESIGN TO DETERMINE LOAD BEARING POINTS.

TREATED LUMBER NOTES:

ALL NAILS, SCREWS, HANGERS, ETC. INSTALLED WITH TREATED LUMBER TO COMPLY WITH APPROPRIATE ASTM STANDARDS. EG. FASTENERS TO COMPLY WITH ASTM A153, HANGERS TO COMPLY WITH ASTM A653, OR ASTM A123.

MLAW TO REVIEW TRUSS LAYOUT DESIGN FOR STRUCTURAL INTEGRITY INTERRELATED TO FRAMING DESIGN

THIS PLAN IS VALID IN BELL, BEXAR, COMAL, HAYS, MCLENNAN, MILAM, TRAVIS, AND WILLIAMSON COUNTIES.

LEGEND

- DEAD LOAD / SNOW / LIVE LOAD — POINT LOAD
- ENGINEERED BEAM
- L/XXX L/XXX DΔ=X.XX TΔ=X.XX — DEFLECTION CRITERIA
- DOUBLE JOIST
- CEILING LINE
- WALL STACKED ON LOWER WALL
- WALL STACKED ON LOWER BEAM

LEVEL 2 CEILING FRAMING
1/4" = 1'-0"

MLAW
CONSULTANTS AND ENGINEERS
2804 LONGHORN BLVD.
AUSTIN, TEXAS 78758
(512) 835-7000

PROPRIETOR
BRECKENRIDGE PROPERTIES
7004 BEE CAVE RD.
BLDG. 3, STE. 330
AUSTIN, TX 78746

CONTRACTOR
MERCK CONTRACTING
P.O. BOX 1105
WACO, TX 78703

TELLURIDE DUPLEX PLAN

ASPEN HEIGHTS TSU
201 COPPER BEECH DRIVE
SAN MARCOS, TX 78666

CLIENT: BRECKENRIDGE

JOB No:1012049054.201
DATE: 10-06-10
DRAWN: EE
CHECK:

A 12-16-10 FLR/RF TRUSSES EE
B 01-07-11 BARTOP WALLS EE

2

SHEET 2 OF 6

P:\2011175\In\2011.10.13\Floor Plans\Telluride Duplex.dwg, 1:1

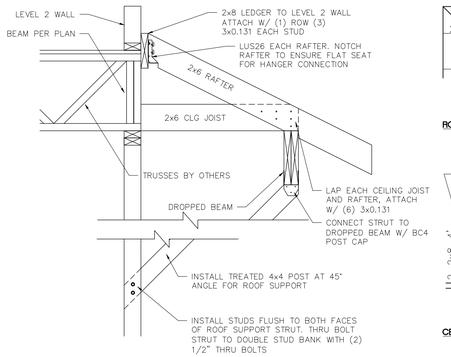

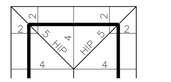

ROOF PLAN

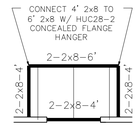

CEILING PLAN

TYPICAL PATIO REAR PATIO ROOF CONNECTION DETAILS

N.T.S.

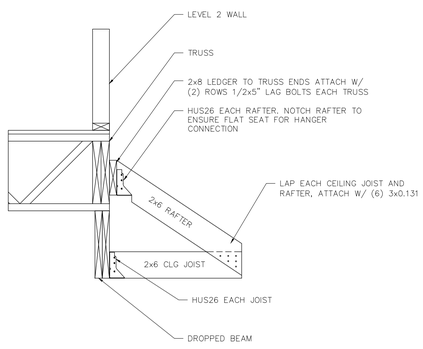

LOWER SHED ROOF CONNECTION DETAIL

N.T.S.

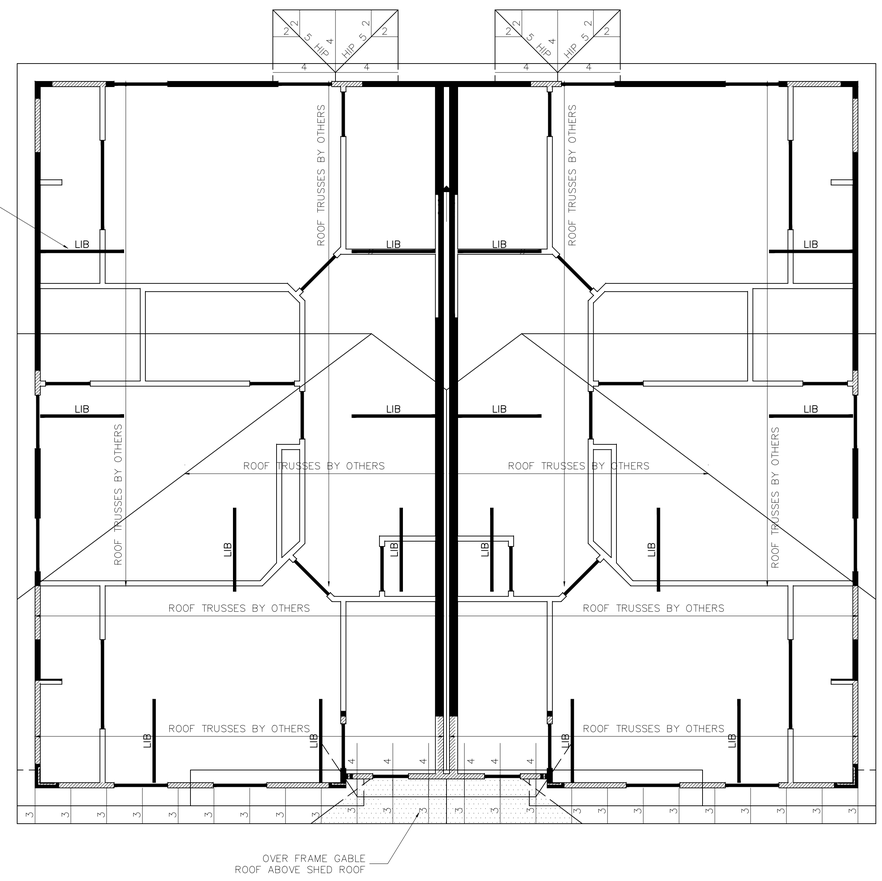

TREATED LUMBER NOTES:

ALL NAILS, SCREWS, HANGERS, ETC. INSTALLED WITH TREATED LUMBER TO COMPLY WITH APPROPRIATE ASTM STANDARDS. EG. FASTENERS TO COMPLY WITH ASTM A153, HANGERS TO COMPLY WITH ASTM A653, OR ASTM A123.

THIS ROOF SYSTEM DESIGNED FOR COMPOSITION ROOF. IF TILE IS TO BE USED, OR OTHER COVERING EXCEEDING 5 PSF, CONTACT ENGINEER FOR REDESIGN

ROOF AND RAFTERS

SPECIES AND GRADE: #3 S.P. FOR SPANS UNDER 8' U.N.O.
#2 S.P. FOR SPANS OVER 8' U.N.O.

SIZE AND SPACING:
RAFTERS 2x6 @ 24" O.C. U.N.O.
HIPS, VALLEYS AND RIDGES PER FRAMING DETAILS
ROOF SHEATHING 7/16" STRUCT. PANEL

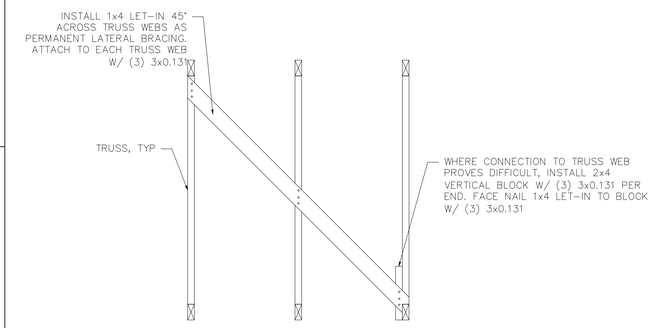

1 1x4 TRUSS BRACING DETAIL
N.T.S.

MLAW TO REVIEW TRUSS LAYOUT DESIGN FOR STRUCTURAL INTEGRITY INTERRELATED TO FRAMING DESIGN

LEGEND
ROOF BRACE
DEAD LOAD / SOURCE / LIVE LOAD — POINT LOAD
ENGINEERED BEAM
DOUBLE JOIST
WALL STACKED ON LOWER WALL
WALL STACKED ON LOWER BEAM

THIS PLAN IS VALID IN BELL, BEXAR, COMAL, HAYS, MCLENNAN, MILAM, TRAVIS, AND WILLIAMSON COUNTIES.

ROOF FRAMING
1/4" = 1'-0"

MLAW
CONSULTANTS AND ENGINEERS
2804 LONGHORN BLVD.
AUSTIN, TEXAS 78758
(512) 835-7000

PROPRIETOR
BRECKENRIDGE PROPERTIES
7004 BEE CAVE RD.
BLDG. 3, STE. 330
AUSTIN, TX 78746

CONTRACTOR
MERCK CONTRACTING
P.O. BOX 1105
WACO, TX 78703

TELLURIDE DUPLEX PLAN
ASPEN HEIGHTS TSU
201 COPPER BEECH DRIVE
SAN MARCOS, TX 78666
CLIENT: BRECKENRIDGE

JOB No:1012049054.201
DATE: 10-06-10
DRAWN: EE
CHECK:
A 12-16-10 FLR/RF TRUSSES EE
B 01-07-11 BARTOP WALLS EE

3
SHEET 3 OF 6

P:\2011\11175\dir\2011.10.13\Floor Plans\Telluride Duplex.dwg, 1:1

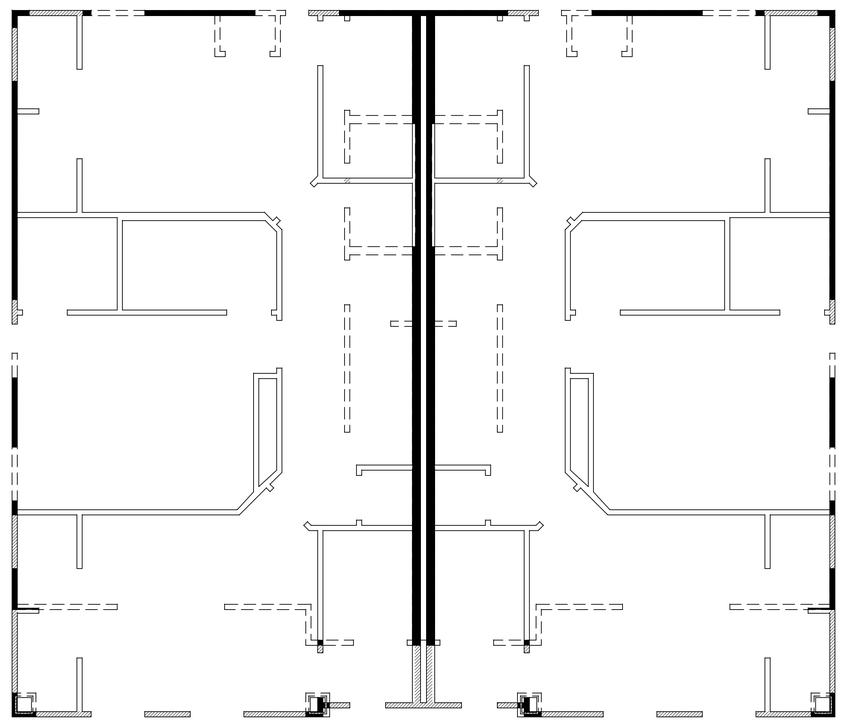

THIS PLAN IS VALID IN BELL, BEXAR, COMAL, HAYS, MCLENNAN, MILAM, TRAVIS, AND WILLIAMSON COUNTIES.

LEGEND

- LOWER LEVEL
- UPPER LEVEL
- WALL STACKED ON LOWER WALL
- WALL STACKED ON LOWER BEAM

OVERLAY
1/4" = 1'-0"

MLAW
CONSULTANTS AND ENGINEERS
2804 LONGHORN BLVD.
AUSTIN, TEXAS 78758
(512) 835-7000

PROPRIETOR
BRECKENRIDGE PROPERTIES
7004 BEE CAVE RD.
BLDG. 3, STE. 330
AUSTIN, TX 78746

CONTRACTOR
MERCK CONTRACTING
P.O. BOX 1105
WACO, TX 78703

TELLURIDE DUPLEX PLAN

ASPEN HEIGHTS TSU
201 COPPER BEECH DRIVE
SAN MARCOS, TX 78666

CLIENT: BRECKENRIDGE

JOB No:1012049054.201
DATE: 10-06-10
DRAWN: EE
CHECK:

A 12-16-10 FLR/RF TRUSSES EE
B 01-07-11 BARTOP WALLS EE

4

SHEET
4 OF 6

P:\2011\11175\Ir\2011.10.13\Floor Plans\Telluride Duplex.dwg, 1:1

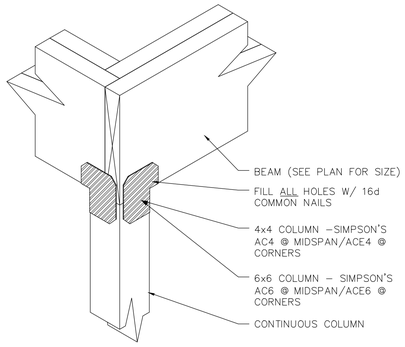

BEAM / COLUMN TOP CONNECTION
N.T.S.

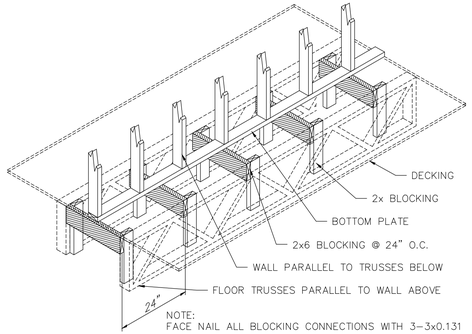

PARALLEL WALL/TRUSS BLOCKING
N.T.S.

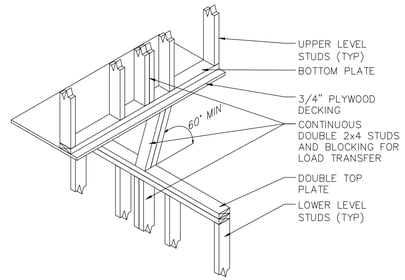

PERPENDICULAR STACKED WALL SUPPORT
N.T.S.

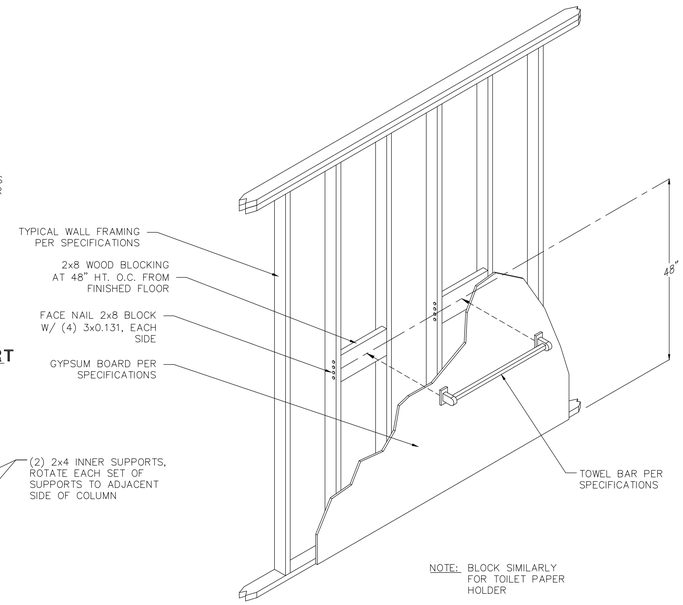

TYPICAL TOWEL BAR IN-WALL BLOCKING
N.T.S.

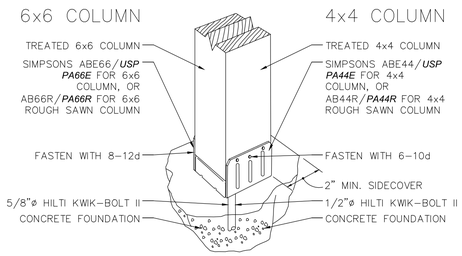

COLUMN BASE CONNECTION
N.T.S.

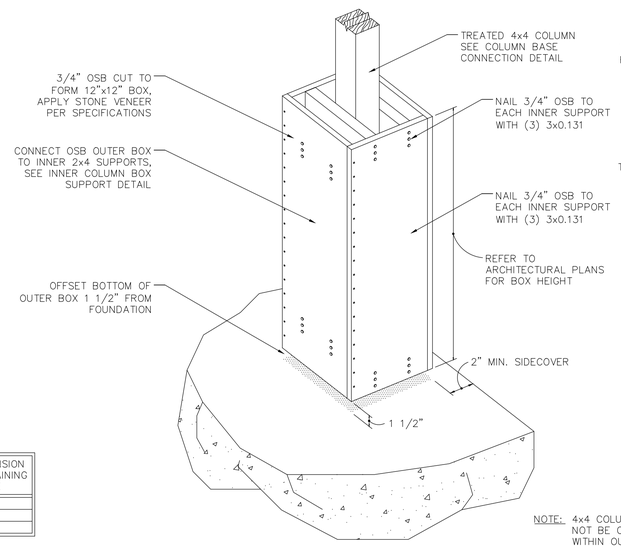

OUTER COLUMN BOX DETAIL
N.T.S.

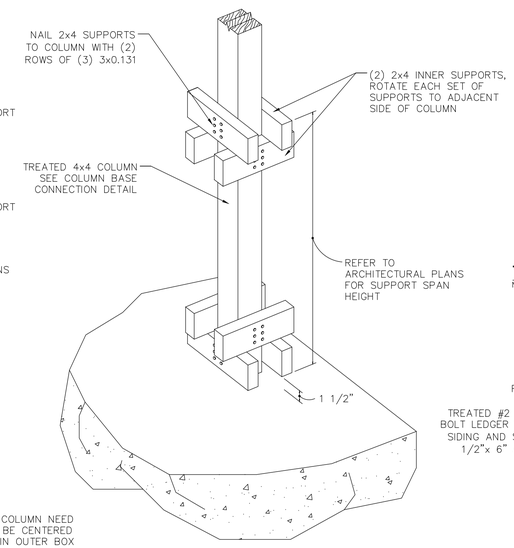

INNER COLUMN BOX SUPPORT DETAIL
N.T.S.

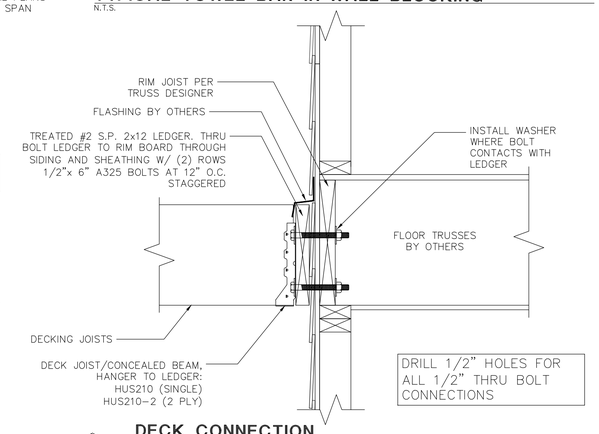

DECK CONNECTION
N.T.S.

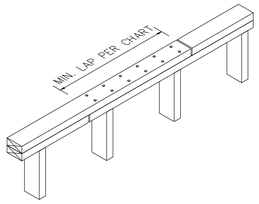

LENGTH OF TOP PLATE LAP @ SPLICE	BUILDING DIMENSION OF WALL CONTAINING TOP PLATE
4' LAP	≤ 40'
6' LAP	40' ≥ 60'
8' LAP	60' ≥ 80'

* TOP PLATE TO BE CONNECTED AT SPLICE W/ 2 ROWS OF 3x0.131 @ 4" O.C.(EACH SIDE @ INTERSECTION). SPLICES NEED NOT OCCUR OVER A STUD

TOP PLATE SPLICE DETAIL
N.T.S.

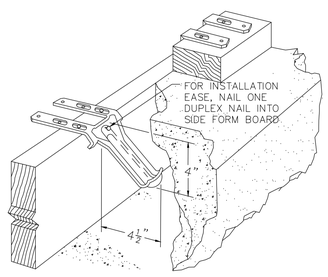

OPTIONAL ANCHOR BOLT ALTERNATIVE (CUT AWAY)
N.T.S.

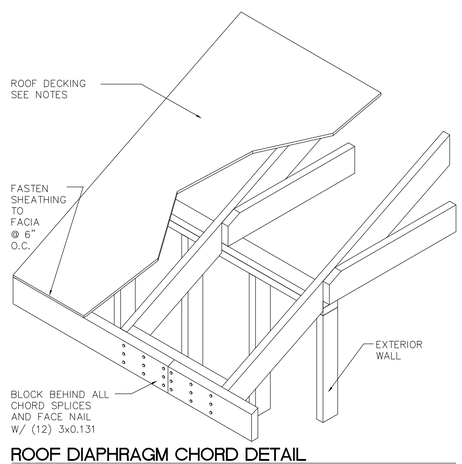

ROOF DIAPHRAGM CHORD DETAIL
SHEAR CAPACITY: 238 PLF

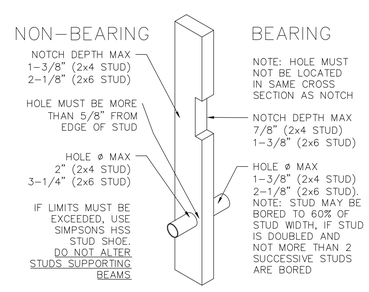

BORED/NOTCHED STUD
N.T.S.

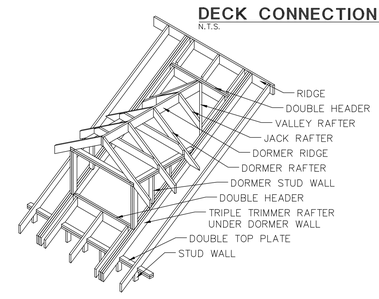

TYPICAL DORMER SUPPORT DETAIL
N.T.S.

THIS PLAN IS VALID IN BELL, BEXAR, COMAL, HAYS, MCLENNAN, MILAM, TRAVIS, AND WILLIAMSON COUNTIES.

FRAMING DETAILS
1/4" = 1'-0"

MLAW
CONSULTANTS AND ENGINEERS
2804 LONGHORN BLVD.
AUSTIN, TEXAS 78758
(512) 835-7000

PROPRIETOR
BRECKENRIDGE PROPERTIES
7004 BEE CAVE RD.
BLDG. 3, STE. 330
AUSTIN, TX 78746

CONTRACTOR
MERCK CONTRACTING
P.O. BOX 1105
WACO, TX 76703

TELLURIDE DUPLEX PLAN
ASPEN HEIGHTS TSU
201 COPPER BEECH DRIVE
SAN MARCOS, TX 78666
CLIENT: BRECKENRIDGE

JOB No:1012049054.201
DATE: 10-06-10
DRAWN: EE
CHECK:
A 12-16-10 FLR/RF TRUSSES EE
B 01-07-11 BARTOP WALLS EE

P:\2011175\Sh\2011.10.13\Floor Plans\Telluride Duplex.dwg, 1:1

FLOOR AND FLOOR JOISTS

UNLESS NOTED OTHERWISE ON PLAN (ALSO SEE MPCW FLOOR TRUSSES, WHERE APPLICABLE):

SPECIES AND GRADE: #2 SOUTHERN PINE U.N.O.

SIZE AND SPACING: 2x12 @ 24" O.C. U.N.O.

FLOOR SHEATHING: 3/4" TONGUE AND GROOVE SIZED FOR SPACING

FLOOR DECKING: FLAT 2x6 W/ 1/8" GAPS FOR EXTERIOR APPLICATIONS

1. **EXTERIOR DECKS.** REFER TO CONNECTION DETAILS PER PLAN.
2. **BEARING.** AT END OF EACH JOIST, BEAR A MINIMUM LENGTH OF 1-1/2". WHERE JOISTS FRAME FROM OPPOSITE SIDES OVER A BEARING SUPPORT, LAP MINIMUM 3" AND FASTEN. WHERE JOISTS FRAME INTO THE SIDE OF A GIRDER, USE JOIST HANGER IN ACCORDANCE WITH THE SCHEDULE.
3. **LATERAL RESTRAINT AT SUPPORTS.** LATERALLY SUPPORT JOISTS AT THE ENDS BY FULL DEPTH SOLID BLOCKING, ATTACHMENT TO A HEADER, BAND OR RIM JOIST, OR TO AN ADJOINING STUD.
4. **TOPPING SLABS.** DO NOT USE TOPPING SLABS UNLESS NOTED OTHERWISE ON PLAN.
5. **ALLOWABLE JOIST SPANS:**

RESIDENTIAL LIVING
IRC R502.3.1(2) LL=40 PSF, DL=10 PSF,
(LIGHT FLOOR COVERING)

Δ = L/360

#2 S.P.	2x6	2x8	2x10	2x12
12" O.C.	10'-9"	14'-2"	18'-0"	21'-9"
16" O.C.	9'-9"	12'-10"	16'-1"	18'-10"
19.2" O.C.	9'-2"	12'-1"	14'-8"	17'-2"
24" O.C.	8'-6"	11'-0"	13'-1"	15'-5"

RESIDENTIAL SLEEPING
IRC R502.3.1(1) LL=30 PSF, DL=10 PSF,
(LIGHT FLOOR COVERING)

Δ = L/360

#2 S.P.	2x6	2x8	2x10	2x12
12" O.C.	11'-10"	15'-7"	19'-10"	24'-2"
16" O.C.	10'-9"	14'-2"	18'-0"	21'-1"
19.2" O.C.	10'-1"	13'-4"	16'-5"	19'-3"
24" O.C.	9'-4"	12'-4"	14'-8"	17'-2"

RESIDENTIAL LIVING
IRC R502.3.1(2) LL=40 PSF, DL=20 PSF,
(HEAVY FLOOR COVERING)

Δ = L/360

#2 S.P.	2x6	2x8	2x10	2x12
12" O.C.	10'-9"	14'-2"	16'-11"	19'-10"
16" O.C.	9'-6"	12'-4"	14'-8"	17'-2"
19.2" O.C.	8'-8"	11'-3"	13'-5"	15'-8"
24" O.C.	7'-9"	10'-0"	12'-0"	14'-0"

RESIDENTIAL SLEEPING
IRC R502.3.1(1) LL=30 PSF, DL=20 PSF,
(HEAVY FLOOR COVERING)

Δ = L/360

#2 S.P.	2x6	2x8	2x10	2x12
12" O.C.	11'-10"	15'-7"	18'-7"	21'-9"
16" O.C.	10'-5"	13'-6"	16'-1"	18'-10"
19.2" O.C.	9'-6"	12'-4"	14'-8"	17'-2"
24" O.C.	8'-6"	11'-0"	13'-1"	15'-5"

RESIDENTIAL LIVING
IRC R502.3.1(2) LL=40 PSF, DL=10 PSF,
(LIGHT FLOOR COVERING)

Δ = L/360

#3 S.P.	2x6	2x8	2x10	2x12
12" O.C.	9'-4"	11'-11"	14'-0"	16'-8"
16" O.C.	8'-1"	10'-3"	12'-2"	14'-6"
19.2" O.C.	7'-4"	9'-5"	11'-1"	13'-2"
24" O.C.	6'-7"	8'-5"	9'-11"	11'-10"

RESIDENTIAL SLEEPING
IRC R502.3.1(1) LL=30 PSF, DL=10 PSF,
(LIGHT FLOOR COVERING)

Δ = L/360

#3 S.P.	2x6	2x8	2x10	2x12
12" O.C.	10'-5"	13'-3"	15'-8"	18'-8"
16" O.C.	9'-0"	11'-6"	13'-7"	16'-2"
19.2" O.C.	8'-3"	10'-6"	12'-5"	14'-9"
24" O.C.	7'-4"	9'-5"	11'-1"	13'-2"

RESIDENTIAL LIVING
IRC R502.3.1(2) LL=40 PSF, DL=20 PSF,
(HEAVY FLOOR COVERING)

Δ = L/360

#3 S.P.	2x6	2x8	2x10	2x12
12" O.C.	8'-6"	10'-10"	12'-10"	15'-3"
16" O.C.	7'-4"	9'-5"	11'-1"	13'-2"
19.2" O.C.	6'-9"	8'-7"	10'-1"	12'-1"
24" O.C.	6'-0"	7'-8"	9'-1"	10'-9"

RESIDENTIAL SLEEPING
IRC R502.3.1(1) LL=30 PSF, DL=20 PSF,
(HEAVY FLOOR COVERING)

Δ = L/360

#3 S.P.	2x6	2x8	2x10	2x12
12" O.C.	9'-4"	11'-11"	14'-0"	16'-8"
16" O.C.	8'-1"	10'-3"	12'-2"	14'-6"
19.2" O.C.	7'-4"	9'-5"	11'-1"	13'-2"
24" O.C.	6'-7"	8'-5"	9'-11"	11'-10"

WOOD WALL FRAMING

1. **R601.2.1 COMPRESSIBLE MATERIALS.** MATERIALS THAT COMPRESS MORE THAN 1/32 INCH WHEN SUBJECTED TO 50 PSI SHALL NOT EXTEND BENEATH WALLS.
2. **R602.1.1 END JOINTED LUMBER.** APPROVED END JOINTED LUMBER MAY BE USED INTERCHANGABLY WITH SOLID-SAWN MEMBERS OF THE SAME SPECIES AND GRADE.
3. **R602.2 GRADE.** STUDS SHALL BE A MIN. #2, STANDARD OR STUD GRADE S.P.F.
4. **R602.3.1 STUD SIZE, HEIGHT, AND SPACING.**

MAX. ALLOWABLE LATERALLY UNSUPPORTED LENGTHS OF WOOD WALL STUDS FOR THE GIVEN STUD SIZE AND SPACING:

SUPPORTING ROOF ONLY	
2x4 @ 16" O.C.	12'-0"
2x6 @ 16" O.C.	18'-0"
2x6 @ 12" O.C.	20'-0"
2x6 @ 8" O.C.	24'-0"

SUPPORTING ONE FLOOR AND A ROOF	
2x4 @ 16" O.C.	10'-0"
2x6 @ 16" O.C.	18'-0"
2x6 @ 12" O.C.	20'-0"
2x6 @ 8" O.C.	24'-0"

SUPPORTING TWO FLOORS AND A ROOF	
2x6 @ 16" O.C.	14'-0"
2x6 @ 12" O.C.	16'-0"
2x6 @ 12" O.C.	18'-0"
2x6 @ 8" O.C.	20'-0"

5. **R602.3.2 TOP PLATE.** CAP WOOD STUD WALLS WITH A DOUBLE TOP PLATE INSTALLED TO PROVIDE OVERLAPPING AT CORNERS AND INTERSECTIONS WITH BEARING PARTITIONS. END JOINTS IN TOP PLATES SHALL BE OFFSET AT LEAST 24". JOINTS NEED NOT OCCUR OVER STUDS. PLATES TO BE SAME SIZE AS STUDS AND MIN UTILITY GRADE S.P.F.
6. **R602.6.1 DRILLING AND NOTCHING OF TOP PLATE.** WHEN TOP PLATE WIDTH IS REDUCED BY MORE THAN 50%, INSTALL SIMPSON RPS/USP ***KRPS*** TIES ACROSS THE NOTCH AND TO THE PLATE AT EACH SIDE OF THE OPENING WITH NOT LESS THAN EIGHT 16d NAILS AT EACH SIDE.
7. **BOTTOM PLATES.**
PLATES IN CONTACT WITH CONCRETE MUST BE PRESSURE TREATED IN ACCORDANCE WITH APPROVED STANDARDS AND SHALL BE ANCHORED TO CONCRETE BY THE FOLLOWING METHODS:
(a) EXTERIOR PLATES IN CONTACT WITH CONCRETE:
(i) 1/2" ANCHOR BOLTS, MIN. 7" EMBED SPACED 6'-0" ON CENTER, MAX. WITH 3x3x3 STEEL PLATE WASHERS BETWEEN THE BOTTOM PLATE AND NUT.
(ii) SIMPSON MAS/USP ***FA3*** MUDSILL ANCHORS INSTALLED PER MANUFACTURERS SPECIFICATIONS, AND SPACED 5' ON CENTER, MAX.
IF ONE OF THE ABOVE METHODS CANNOT BE PLACED BETWEEN 4" AND 12" FROM THE ENDS OF EACH PLATE SECTION, USE (2) SIMPSONS PDPWL-300(OR EQUAL) PLACED @ 6" AND 10" FROM EACH END OF SILL PLATES.
(b) INTERIOR NON-SHEARWALL PLATES IN CONTACT WITH CONCRETE SHALL BE ANCHORED TO CONCRETE W/ SIMPSONS PDPWL-300(OR EQUAL) @ 32" O.C.
(c) INTERIOR SHEARWALL PLATES SHALL BE ANCHORED TO CONCRETE W/ SIMPSONS PDPWL-300(OR EQUAL) @ 8" O.C., U.N.O.
(d) BOTTOM PLATES IN CONTACT WITH LUMBER TO BE FASTENED PER FASTENER SCHEDULE.
8. **PLATE HEIGHT.** UNLESS NOTED OTHERWISE, WALLS ARE PLATFORM FRAMED WHEREVER APPLICABLE. SEE ARCHITECTURAL DRAWINGS FOR EXACT DIMENSION AND STRUCTURAL DRAWINGS FOR ACCEPTABLE MAXIMUM. CONTACT ENGINEER IF DISCREPANCIES ARE FOUND.
9. **OPENINGS.** OPENINGS SHALL BE FRAMED WITH HEADER AND TRIMMER JOISTS. IF HEADER SPAN IS LESS THAN 4', THE HEADER MAY BE A SINGLE MEMBER THE SAME SIZE AS RAFTER. A SINGLE TRIMMER MAY BE USED TO CARRY A SINGLE HEADER THAT IS LOCATED WITHIN 3' OF TRIMMER BEARING. IF HEADER SPAN EXCEEDS 4', THE HEADER AND TRIMMERS SHALL BE DOUBLED AND JOIST HANGERS SHALL BE INSTALLED.
10. **UNEXPECTED CONDITIONS.** IF CONDITIONS ARISE THAT ARE NOT COVERED BY THIS PLAN, CONTACT THE ENGINEER AT ONCE FOR ADDITIONAL INSTRUCTIONS.

ENGINEERED BEAMS

1. **CAPACITY.**
(a) ALL SOLID SAWN LUMBER BEAMS/HEADERS LABELED ON PLAN AS 2x10 OR GREATER,TO BE #2 SOUTHERN PINE U.N.O.
(b) ALL STRUCTURAL COMPOSITE LUMBER USED IN CONSTRUCTION MUST HAVE THE FOLLOWING MINIMUM CAPACITIES:
FIBER BENDING (Fb) = 2600 PSI
MODULUS OF ELASTICITY (E) = 1,900,000 PSI
SHEAR STRENGTH (Fv) = 285 PSI
COMPRESSION PERPENDICULAR (Fc⊥) = 170 PSI
2. **SUPPORT.** FOR BEAMS BEARING ON STUD WALLS, THERE SHALL BE THE SAME NUMBER OF STUDS LOCATED DIRECTLY UNDER THE BEAM AS THE NUMBER OF BEAM PLYS.
3. **ELEVATION.** BEAMS SHOWN ON PLAN ARE DROPPED BEAMS OR HEADERS UNLESS NOTED AS CLD (CONCEALED) OR FLT (FLOATING).
4. **FLOATING BEAMS.** FLOATING BEAMS SHALL HAVE A MINIMUM CLEARANCE OF 1-1/2" FROM BOTTOM OF BEAM.
5. **LATERAL RESTRAINT.** ALL BEAMS SHALL BE LATERALLY BRACED AT ALL SUPPORT POINTS. FLOATING BEAMS SHOULD HAVE ADDITIONAL LATERAL SUPPORT AT 1/3 SPAN POINTS. ALL KICKERS SHOULD BE PLACED AT AN ANGLE BETWEEN 45° AND HORIZONTAL.
6. **SUBSTITUTIONS.** GLU-LAM BEAMS OR OTHER APPROVED ENGINEERED STRUCTURAL COMPOSITE LUMBER MAY BE SUBSTITUTED FOR BEAMS NOTATED ON PLAN, PROVIDED THAT THE STRENGTH VALUES ARE EQUAL TO OR GREATER THAN THE VALUES LISTED ABOVE.

CEILING AND CEILING JOISTS

1. **LOADING.** ATTIC AREAS ARE DESIGNED AS UNINHABITABLE WITH LIMITED STORAGE (MAXIMUM LIVE LOAD = 20 PSF, DEAD LOAD = 10 PSF)
2. **R802.3.1 CEILING JOIST CONNECTIONS.** WHERE CEILING JOISTS FRAME FROM OPPOSITE SIDES OVER A BEARING SUPPORT, JOISTS SHALL BE LAPPED 3" AND FASTENED. WHERE JOISTS ARE NOT CONNECTED TO RAFTERS AT THE TOP PLATE, JOISTS SHALL BE INSTALLED HIGHER IN THE ATTIC TO PROVIDE A CONTINUOUS TIE. WHERE JOISTS ARE NOT PARALLEL TO RAFTERS, 2x4 RAFTER TIES SHALL BE INSTALLED
3. **BEARING.** AT END OF EACH JOIST, BEAR A MINIMUM LENGTH OF 1-1/2". WHERE JOISTS FRAME FROM OPPOSITE SIDES OVER A BEARING SUPPORT, LAP MINIMUM 3". WHERE JOIST FRAME INTO THE SIDE OF A GIRDER, USE SIMPSON HANGER IN ACCORDANCE WITH THE SCHEDULE.
4. **R802.8 LATERAL SUPPORT.** RAFTERS AND CEILING JOISTS 2x10 OR GREATER SHALL BE PROVIDED WITH LATERAL SUPPORT AT BEARING POINTS TO PREVENT ROTATION. SUPPORT JOISTS BY SOLID BLOCKING AT SUPPORT POINTS, DIAGONAL BRIDGING, OR A CONTINUOUS 1x4 RAT RUN NAILED ACROSS JOISTS AT INTERVALS NOT EXCEEDING 8'.
5. **STABILITY OF NONBEARING WALLS.** WHERE CEILING JOISTS ARE PARALLEL TO NONBEARING WALL, BRACE TOP OF WALL WITH 2x4 BLOCKING AT 24" O.C. BETWEEN JOISTS.
6. **R802.9 FRAMING OF OPENINGS.** OPENINGS IN ROOF AND CEILING FRAMING SHALL BE FRAMED WITH DOUBLE HEADER AND DOUBLE TRIMMER JOISTS.
7. **MECHANICAL EQUIPMENT SUPPORT.** IF NOT DESIGNATED ON PLAN, ALL MECHANICAL EQUIPMENT AND WATER HEATERS SHALL BE SUPPORTED BY MIN. DOUBLE 2x10 JOISTS @ 24" O.C.
8. **R301.5 LIVE LOADS.** TABLE R301.5b ATTICS WITHOUT STORAGE ARE THOSE WHERE THE MAXIMUM CLEAR HEIGHT BETWEEN JOIST AND RAFTER IS LESS THAN 42".
9. **R807.1 ATTIC ACCESS.** A ROUGH FRAMED OPENING NOT LESS THAN 22"x30" SHALL BE PROVIDED TO ATTIC AREAS THAT EXCEED 30 SQUARE FEET AND HAVE A VERTICAL HEIGHT OF 30" OR MORE.
10. **R802.4 ALLOWABLE CEILING JOIST SPANS.** SPANS FOR CEILING JOISTS SHALL BE IN ACCORDANCE WITH TABLES R802.4(1) AND R802.4(2)

IRC R802.4(2) LL=20 PSF, DL=10 PSF,
(LIMITED STORAGE)

Δ = L/240

#2 S.P.	2x6	2x8	2x10	2x12
12" O.C.	15'-6"	20'-1"	23'-11"	26'-0"
16" O.C.	13'-6"	17'-5"	20'-9"	24'-4"
19.2" O.C.	12'-3"	15'-10"	18'-11"	22'-2"
24" O.C.	11'-0"	14'-2"	16'-11"	19'-10"

IRC R802.4(2) LL=20 PSF, DL=10 PSF,
(LIMITED STORAGE)

Δ = L/240

#3 S.P.	2x6	2x8	2x10	2x12
12" O.C.	12'-0"	15'-4"	18'-1"	21'7"
16" O.C.	10'-5"	13'-3"	15'-8"	18'-8"
19.2" O.C.	9'-6"	12'-1"	14'-4	17'-1
24" O.C.	8'-6"	10'-10"	12'-10"	15'-3"

JOIST AND BEAM HANGERS

1. HANGERS MUST BE INSTALLED USING THE SPECIFIED FASTENERS IN ALL HOLES, INCLUDING TRIANGULAR HOLES.
2. ALL SPECIFIED FASTENERS MUST BE INSTALLED PRIOR TO LOADING THE CONNECTION.
3. TECO NAILS SHOULD ONLY BE POWER DRIVEN USING PNUEMATIC TOOLS CAPABLE OF SUPPORTING POSITIVE PLACEMENT MECHANISM TO ENSURE NAILS ARE DRIVEN INTO PREFORMED HANGER NAIL HOLES.
4. TECO NAILS MAY NOT BE SUBSTITUTED FOR COMMON NAILS IN DOUBLE SHEAR HANGERS (i.e. LUS, MUS, HUS, HHUS, HGUS)
5. JOISTS MUST BEAR COMPLETELY ON CONNECTOR SEAT, AND THE GAP BETWEEN JOIST AND GIRDER MUST NOT EXCEED 1/8".

FACE MOUNT HANGER SCHEDULE

MEMBER	SIMPSONS PRODUCT NUMBER	CAPACITY (100%)	*USP PRODUCT NUMBER*	*CAPACITY (100%)*
2x4	LU24	530	*JL24*	*545*
2x6, 8	LU26	800	*JL26*	*815*
2x10	LU28	1065	*JL28*	*1360*
2x12	LU210	1330	*JL210*	*1905*
2-2x4	U24-2	530	*SUH24-2*	*830*
2-2x6, 8	U26-2	1065	*SUH26-2*	*1380*
2-2x10, 12	U210-2	1860	*SUH210-2*	*1930*
2-1.75x11.25	HGUS48	6805	*THDH410*	*8170*
2-1.75x14, 16	HGUS410	8780	*THDH412*	*9875*
2-1.75x18	HGUS414	10015	*THDH414*	*11100*
3-2x10, 12	U210-3	1860	*SUH210-3*	*1930*
3-1.75x11.25	HGUS5.50/12	9155	*THDH610*	*8640*
3-1.75x14-18	HGUS5.50/14	10015	*THDH612*	*9935*
4-2x10, 12	HHUS210-4	5190	*HD210-4*	*3360*
4-1.75x11.25	HGUS7.25/12	9835	*THDH7212*	*9875*
4-1.75x14-18	HGUS7.25/14	11110	*THDH7214*	*11580*
ALL 5 PLY LVL	HHGU9.00-SDS	17845	*KEG9*	*18185*
45° SKEWED HANGERS				
2x4	SUR/L24	530	*SKH24R/L*	*510*
2x6, 8	SUR/L26	800	*SKH26R/L*	*830*
2x10, 12	SUR/L210	1330	*SHK210R/L*	*1790*
2-2x6, 8	SUR/L26-2	1065	*SKH26R/L-2*	*830*
2-2x10, 12	SUR/L210-2	1860	*SKH210R/L-2*	*1930*
2-1.75x11.25, 14	HSUR/L410	2680	*SKH410R/L*	*2240*
2-1.75x16, 18	HSUR/L414	3485	*SKH414R/L*	*3080*

ROOF AND RAFTERS

1. **ROOFING MATERIAL AND MAXIMUM WEIGHT.** COMPOSITION ROOF COVERING NOT TO EXCEED 5 PSF. TILE ROOF COVERING NOT TO EXCEED 15 PSF. CONTACT ENGINEER AT ONCE IF DISCREPANCIES ARE FOUND.
2. **R802.3.1 CEILING JOIST AND RAFTER CONNECTIONS.** FASTEN CEILING JOISTS AND RAFTERS TOGETHER AND TO THE WALL TOP PLATE. CREATE CONTINUITY FROM ONE SIDE OF ROOF TO OPPOSITE BY NAILING RAFTERS TO ADJACENT CEILING JOISTS. MIN. 1x4 COLLAR TIES @ 48" O.C. SHALL BE FASTENED TO OPPOSING RAFTERS IN THE UPPER THIRD OF THE ATTIC. WHERE RAFTER/JOIST ASSEMBLY IS EXPOSED TO WIND LOADS FROM BELOW, SUCH AS PORCHES AND PATIOS, CONNECT EACH ASSEMBLY TO BEARING LOCATION WITH SIMPSON H2.5/USP RT7 HURRICANE TIE.
3. **ROOF BRACES.** BRACE ONLY AS SHOWN AND PROVIDE TWO STUDS IN WALLS DIRECTLY BENEATH BRACE POINTS. FOR BRACE LENGTHS UP TO 12', USE A 2x4 BRACE WITH A 2x6 STIFFBACK. FOR GREATER THAN 12', USE A 2x6 WITH A 2x6 STIFFBACK.
4. **R802.5.1 PURLINS.** PURLINS SHALL BE INSTALLED WHERE SHOWN ON PLAN. PURLINS SHALL BE CONTINUOUS, THE SAME SIZE AS THE SUPPORTED RAFTERS AND BRACED AT 48" O.C. TO DESIGNATED LOCATIONS. SLOPE BETWEEN 45° AND VERTICAL.
5. **R802.5 ALLOWABLE RAFTER SPANS.** SPANS FOR RAFTERS SHALL BE IN ACCORDANCE WITH TABLES R802.5.1(1) AND R802.5.1(2). SHOWN TABLES ASSUME CEILING JOISTS ARE LOCATED AT THE TOP PLATE OF RAFTER SUPPORT WALLS.
6. **OPENINGS.** OPENINGS SHALL BE FRAMED WITH HEADER AND TRIMMER JOISTS. IF HEADER SPAN IS LESS THAN 4', THE HEADER MAY BE A SINGLE MEMBER THE SAME SIZE AS RAFTER. A SINGLE TRIMMER MAY BE USED TO CARRY A SINGLE HEADER THAT IS LOCATED WITHIN 3' OF TRIMMER BEARING. IF HEADER SPAN EXCEEDS 4', THE HEADER AND TRIMMERS SHALL BE DOUBLED AND JOIST HANGERS SHALL BE INSTALLED.

IRC R802.5.1(1) LL=20 PSF, DL=10 PSF,
(NOT ATTACHED TO CEILING)

Δ = L/180

#2 S.P.	2x6	2x8	2x10	2x12
12" O.C.	17'-0"	22'-5"	26'-0"	26'-0"
16" O.C.	15'-1"	19'-5"	23'-2"	26'-0"
19.2" O.C.	13'-9"	17'-9"	21'-2"	24'-10"
24" O.C.	12'-3"	15'-10"	18'-11"	22'-2"

IRC R802.5.1(2) LL=20 PSF, DL=10 PSF,
(ATTACHED TO CEILING)

Δ = L/240

#2 S.P.	2x6	2x8	2x10	2x12
12" O.C.	15'-6"	20'-5"	26'-0"	26'-0"
16" O.C.	14'-1"	18'-6"	23'-2"	26'-0"
19.2" O.C.	13'-3"	17'-5"	21'-2"	24'-10"
24" O.C.	12'-3"	15'-10"	18'-11"	22'-2"

IRC R802.5.1(1) LL=20 PSF, DL=20 PSF,
(NOT ATTACHED TO CEILING)

Δ = L/180

#2 S.P.	2x6	2x8	2x10	2x12
12" O.C.	15'-1"	19'-5"	23'-2"	26'-0"
16" O.C.	13'-6"	16'-10"	20'-1"	23'-7"
19.2" O.C.	11'-11"	15'-4"	18'-4"	21'-6"
24" O.C.	10'-8"	13'-9"	16'-5"	19'-3"

IRC R802.5.1(2) LL=20 PSF, DL=20 PSF,
(ATTACHED TO CEILING)

Δ = L/240

#2 S.P.	2x6	2x8	2x10	2x12
12" O.C.	15'-1"	19'-5"	23'-2"	26'-0"
16" O.C.	13'-6"	16'-10"	20'-1"	23'-7"
19.2" O.C.	11'-11"	15'-4"	18'-4"	21'-6"
24" O.C.	10'-8"	13'-9"	16'-5"	19'-3"

IRC R802.5.1(1) LL=20 PSF, DL=10 PSF,
(NOT ATTACHED TO CEILING)

Δ = L/180

#3 S.P.	2x6	2x8	2x10	2x12
12" O.C.	13'-6"	17'-2"	20'-3"	24'-1"
16" O.C.	11'-8"	14'-10"	17'-6"	20'-11"
19.2" O.C.	10'-8"	13'-7"	16'-0"	19'-1"
24" O.C.	9'-6"	12'-1"	14'-4"	17'-1"

IRC R802.5.1(2) LL=20 PSF, DL=10 PSF,
(ATTACHED TO CEILING)

Δ = L/240

#3 S.P.	2x6	2x8	2x10	2x12
12" O.C.	13'-6"	17'-2"	20'-3"	24'-1"
16" O.C.	11'-8"	14'-10"	17'-6"	20'-11"
19.2" O.C.	10'-8"	13'-7"	16'-0"	19'-1"
24" O.C.	9'-6"	12'-1"	14'-4"	17'-1"

IRC R802.5.1(1) LL=20 PSF, DL=20 PSF,
(NOT ATTACHED TO CEILING)

Δ = L/180

#3 S.P.	2x6	2x8	2x10	2x12
12" O.C.	11'-8"	14'-10"	17'-6"	20'-11"
16" O.C.	10'-1"	12'-10"	15'-2"	18'-1"
19.2" O.C.	9'-3"	11'-9"	13'-10"	16'-6"
24" O.C.	8'-3"	10'-6"	12'-5"	14'-9"

IRC R802.5.1(2) LL=20 PSF, DL=20 PSF,
(ATTACHED TO CEILING)

Δ = L/240

#3 S.P.	2x6	2x8	2x10	2x12
12" O.C.	11'-8"	14'-10"	17'-6"	20'-11"
16" O.C.	10'-1"	12'-10"	15'-2"	18'-1"
19.2" O.C.	9'-3"	11'-9"	13'-10"	16'-6"
24" O.C.	8'-3"	10'-6"	12'-5"	14'-9"

FASTENER SCHEDULE

DESCR OF BUILDING ELEMENTS	***NUMBER AND TYPE OF FASTENER***
WALL FRAMING	
TOP OR SOLE PLATE TO STUD FACE NAIL	3-3x0.131
TOP OR SOLE PLATE TO STUD TOE NAIL	4-3x0.131
DOUBLE TOP PLATE MIN 24" LAP OF END JOINTS, FACE NAIL	8-3x0.131
CAP/TOP PLATE LAPS AND INTERSECTIONS, FACE NAIL	3-3x0.131 EACH SIDE
1x4 BRACING TO STUDS/PLATES FACE NAIL	2-3x0.131
SOLE PLATE TO JOIST OR BLOCKING	3x0.131
@ BRACED PANELS, FACE NAIL	4 PER 16" SPACE
SOLE PLATE TO JOIST OR BLOCKING FACE NAIL	3x0.131 @ 8" O.C.
DOUBLE TOP PLATE, FACE NAIL	3x0.131 @ 12" O.C.
DOUBLE STUDS, FACE NAIL	3x0.131 @ 8" O.C.
CORNER STUDS, FACE NAIL	3x0.131 @ 16" O.C.
HEADER TO KING STUD, TOE NAIL	4-3x0.131
CEILING AND ROOF FRAMING	
CEILING JOIST TO PLATE TOE NAIL	5-3x0.131
CEILING JOIST LAPS OVER WALLS FACE NAIL	4-3x0.131
CEILING JOIST TO PARALLEL RAFTER FACE NAIL	4-3x0.131
COLLAR TIE TO RAFTER, FACE NAIL	4-3x0.131
JACK RAFTER TO HIP, TOE NAIL	4-3x0.131
JACK RAFTER TO HIP, FACE NAIL	3-3x0.131
RAFTER TO TOP PLATE, TOE NAIL	3-3x0.131
RAFTER TO 2x RIDGE, FACE NAIL	3-3x0.131
RAFTER TO 2x RIDGE, TOE NAIL	3-3x0.131
BLOCKING BETWEEN RAFTER TO TOP PLATE, TOE NAIL	4-3x0.131
FLOOR FRAMING	
FLOOR JOIST TO BAND JOIST FACE NAIL	5-3x0.131
FLOOR JOIST TO SILL PLATE TOE NAIL	4-3x0.131
BLOCKING BETWEEN FLOOR JOIST TO SILL PLATE, TOE NAIL	4-3x0.131
BRIDGING TO FLOOR JOIST EACH END, TOE NAIL	3-3x0.120
RIM JOIST TO TOP PLATE, TOE NAIL	3x0.131 @ 6" O.C.
1x6 SUBFLOOR OR LESS TO EACH JOIST, FACE NAIL	2-3x0.131
2x SUBFLOOR TO EACH JOIST, BLIND AND FACE NAIL	3-3x0.131
BUILT UP GIRDERS AND BEAMS FACE NAIL	3x0.131 @ 24" O.C.T&B & 3-3x0.131 @ ENDS

SHEATHING FASTENING REQUIREMENTS

ROOF SHEATHING	
5/16"-1"	REFER TO COMPONENTS AND CLADDING REQUIREMENTS ON UPLIFT DETAILS PAGE.
WALL SHEATHING	
1/2" OR LESS	1-3/4"x16 GA. STAPLES 6" O.C. EDGE, 12" O.C. FIELD
19/32"-5/8"	1-3/4"x16 GA. STAPLES 3" O.C. EDGE, 6" O.C. FIELD
3/4"	1-3/4"x16 GA. STAPLES 3" O.C. EDGE, 6" O.C. FIELD
FLOOR SHEATHING	
3/4"	1-3/4"x16 GA. STAPLES 3" O.C. EDGE, 6" O.C. FIELD

1. THIS FASTENING SCHEDULE DERIVED FROM ICC EVALUATION SERVICE, INC. LEGACY REPORT #NER-272 REVISION A, DATED AUGUST 1, 2004
2. THIS FASTENING SCHEDULE APPLIES TO FRAMING MEMBERS HAVING AN ACTUAL THICKNESS OF 1-1/2" TO 1-3/4"
3. FASTENINGS ABOVE MAY ALSO BE USED FOR OTHER CONNECTIONS THAT ARE NOT LISTED BUT HAVE THE SAME CONFIGURATION AND THE SAME CODE REQUIREMENT FOR FASTENER QUANITY/SPACING AND FASTENER SIZE.
4. STAPLE CROWNS SHALL HAVE A MINIMUM WIDTH OF 7/16" OVERALL

MWFRS (MAIN WIND FORCE RESISTING SYSTEM)

1. AN ENGINEERED LATERAL BRACING DESIGN HAS BEEN PROVIDED FOR THIS PLAN. REFER TO LATERAL BRACING PAGES AND DETAILS FOR CONSTRUCTION DETAILS.
2. WALLS SHOWN IN CONTINUOUS LINETYPE ON LATERAL BRACING PAGES ARE SHEARWALLS THAT HAVE BEEN ENGINEERED TO RESIST WIND LOADS BASED ON ASCE 7-05 "THE STANDARD"
3. LIB'S SHOWN ON PLAN ARE IN APPROXIMATE LOCATIONS THESE MAY BE MOVED UP TO THREE FEET ALONG SAME SHEAR LINE, WHERE CONDITIONS ALLOW.
4. WALLS SHOWN IN HIDDEN LINETYPE ON LATERAL BRACING PAGES ARE NON-SHEARWALLS AND ARE NOT INTENDED TO PROVIDE RESISTANCE TO WIND LOADS.
5. ROOF AND FLOOR WOOD DIAPHRAGMS HAVE BEEN DESIGNED WITH SUFFICIENT CAPACITY TO TRANSFER ALL WIND LOAD TO ADJACENT SHEARWALLS.
6. MAIN WIND FORCE RESISTING SYSTEM DESIGNED PER LOCAL CONSTRUCTION STANDARDS, IRC/IBC 2006 AND ACCEPTED ENGINEERING PRACTICE.

MPCW FLOOR TRUSSES

1. **CRITERIA.** DESIGN TRUSSES FOR THE MINIMUM LINE AND POINT LOADS SHOWN ON PLAN (LINE LOADS FROM UPPER WALLS ARE MINIMUM 100 LB/FT U.N.O.)
2. **BRACING.** RESTRAIN TOP CHORD WITH FLOOR SHEATHING AND BOTTOM CHORD WITH CEILING GYPSUM . RESTRAIN TRUSSES AT POINTS OF BEARING TO PREVENT TOPPLING.
3. **TRANSITORY FLOOR VIBRATION AND SOUND TRANSMISSION.** THE FLOOR SYSTEM INCLUDES NO MEASURES TO SPECIFICALLY CONTROL FLOOR VIBRATION OR SOUND TRANSMISSION. CONTACT ENGINEER PRIOR TO CONSTRUCTION IF SPECIFIC PERFORMANCE CRITERIA ARE DESIRED.
5. **POINT LOADS ON FLOOR SYSTEM.** PROVIDE BLOCKING FROM UNSUPPORTED POINT LOADS ON FLOOR SYSTEM TO SUPPORT BELOW. BLOCKING MAY BE ANGLED MIN 60° FROM HORIZONTAL.

GENERAL

1. ALL DESIGNS BASED ON IRC 2006 COMPLIANCES.
2. GRADE MARKS ON ALL LUMBER SHALL BE VISIBLE AT TIME OF INSPECTION.
3. DO NOT USE END JOINTED LUMBER FOR HORIZONTAL FRAMING MEMBERS.
4. ALL CONNECTIONS TO BE FASTENED PER FASTENING SCHEDULE AND FRAMING DETAILS.
5. ALL FRAMING CREATING CONCENTRATED LOADS TO BE INSTALLED EXACTLY IN THE LOCATIONS SHOWN ON PLAN TO PROVIDE A CONTINUOUS LOAD TRANSFER PATH TO CONCRETE.
6.

FRONT ELEVATION

P:\2011175\In\2011.10.13\Elevations\Boulder Plan.dwg, 1:96

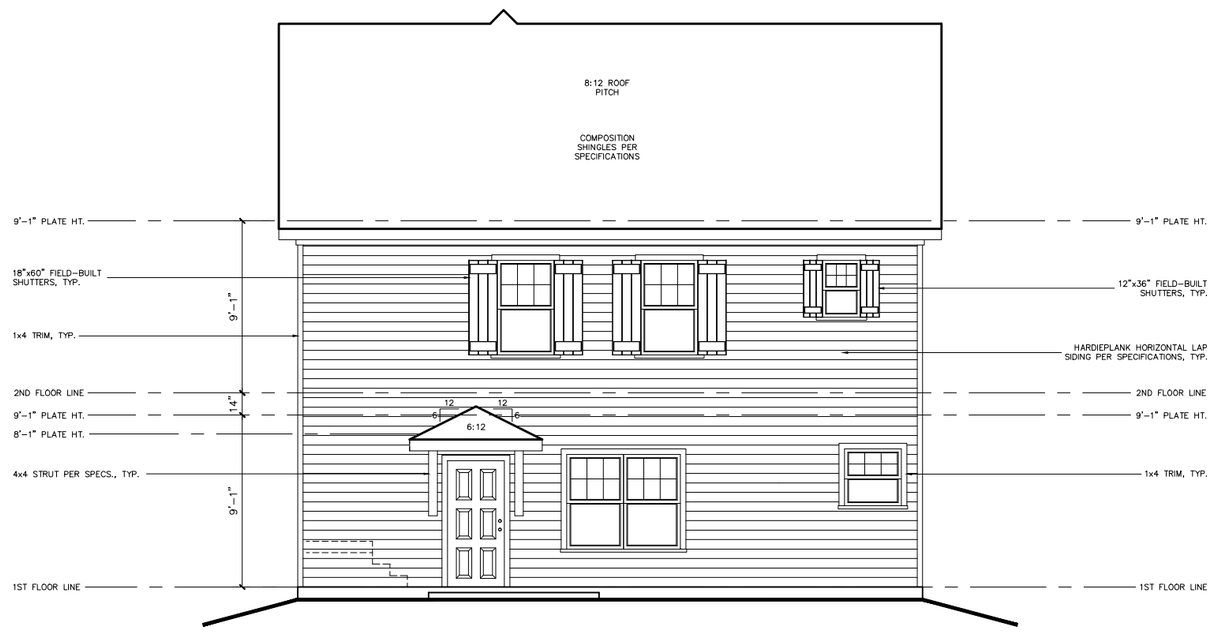

REAR ELEVATION

P:\20111175\In\2011.10.13\Elevations\Boulder Plan.dwg, 1:96

LEFT ELEVATION

P:\20111175\In\2011.10.13\Elevations\Boulder Plan.dwg, 1:96

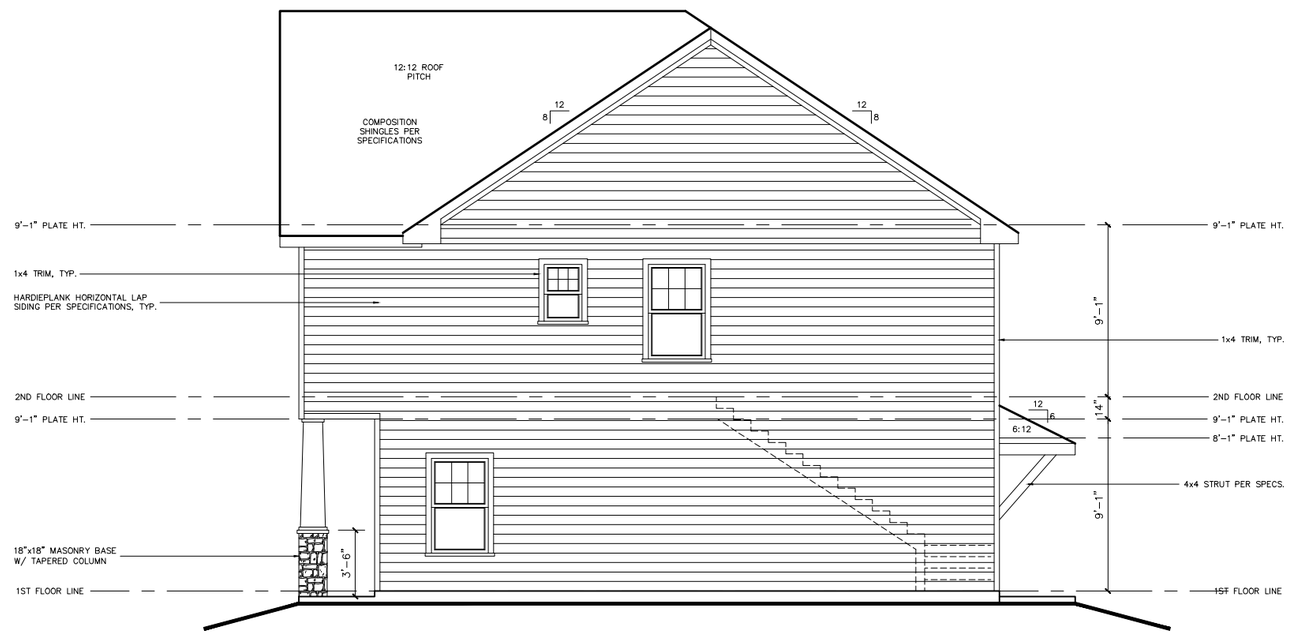

RIGHT ELEVATION

P:\20111175\In\2011.10.13\Elevations\Boulder Plan.dwg, 1:96

CEILING AND CEILING JOISTS

SPECIES AND GRADE: #3 S.P. FOR SPANS UNDER 8' U.N.O.
#2 S.P. FOR SPANS OVER 8' U.N.O.
SIZE AND SPACING: 2x6 @ 24" O.C. U.N.O.
CEILING SHEATHING: 1/2" GYPSUM PANELS

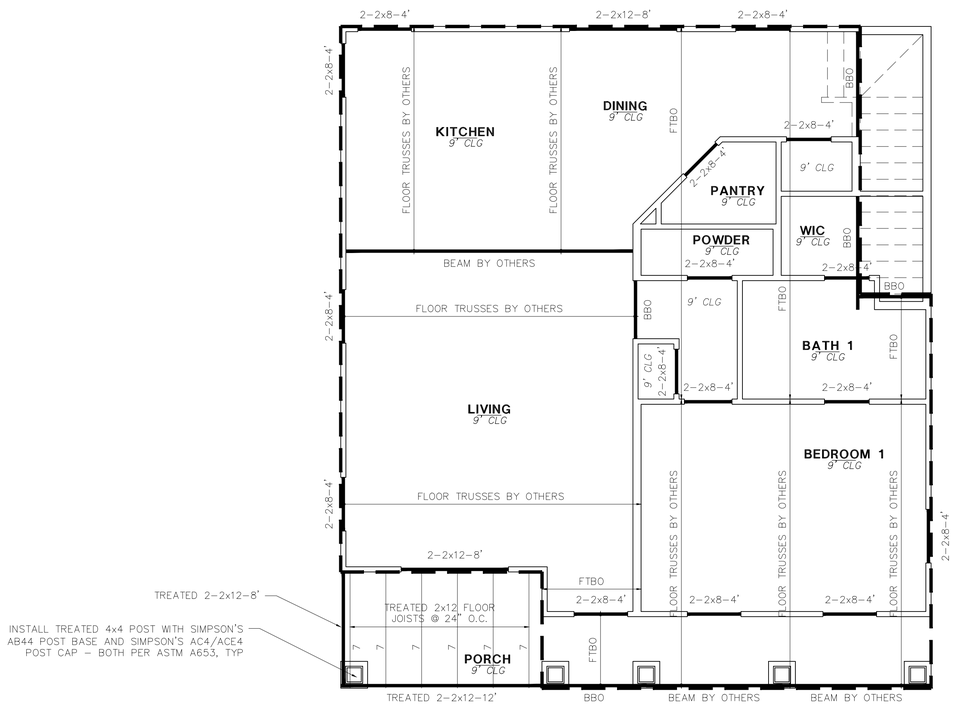

HEADER NOTES:

HEADERS BELOW FLOOR SYSTEM HAVE NOT BEEN DESIGNED TO SUPPORT CONCENTRATED LOADS IMPOSED FROM ABOVE. FLOOR SYSTEM DESIGNER TO DETERMINE HEADER SIZE FOR ALL HEADERS SUPPORTING CONCENTRATED LOADS. NON-LOAD BEARING HEADERS MAY BE FRAMED WITH FLAT 2x4. REFER TO TRUSS DESIGN TO DETERMINE LOAD BEARING POINTS.

DECK NOTES:

1. DECKING MATERIAL PER BUILDER. FASTEN DECKING TO FLOOR JOISTS W/ (2) 3" HDG DECK SCREWS (DECK SCREWS MUST CONFORM TO ASTM A153) AT EACH BEARING POINT. BLOCK JOISTS AT EACH SPLICE AND DRILL PILOT HOLES TO PREVENT SPLITTING AT EACH END OF DECKING.

2. ALL STRUCTURAL MEMBERS AT LOWER DECK, INCLUDING BEAMS, JOIST AND LEDGER BOARDS TO BE TREATED KD19 #2 S.P. OR BETTER.

3. ALL CONNECTORS TO BE HOT-DIP GALVANIZED, CONFORMING MINIMALLY TO ASTM A653 FOR "CONTINUOUS" GALVANIZATION, OR ASTM A123 FOR "POST" OR "BATCH" GALVANIZATION.

4. ALL FASTENERS, INCLUDING BOLTS, NAILS AND SCREWS TO CONFORM TO ASTM A153.

MLAW TO REVIEW TRUSS LAYOUT DESIGN FOR STRUCTURAL INTEGRITY INTERRELATED TO FRAMING DESIGN

THIS PLAN IS VALID IN BELL, BEXAR, COMAL, HAYS, MCLENNAN, MILAM, TRAVIS, AND WILLIAMSON COUNTIES.

LEGEND

- DEAD LOAD / SOURCE / LIVE LOAD — POINT LOAD
- LINE LOAD
- ENGINEERED BEAM
- L/XXX L/XXX D.L=X.XX T.L=X.XX DEFLECTION CRITERIA
- FLOOR FRAMING EXTENTS
- DOUBLE CEILING JOIST
- TJI FLOOR JOIST
- CEILING LINE

LEVEL 1 CEILING FRAMING
1/4" = 1'-0"

MLAW
CONSULTANTS AND ENGINEERS
2804 LONGHORN BLVD.
AUSTIN, TEXAS 78758
(512) 835-7000

PROPRIETOR
BRECKENRIDGE PROPERTIES
7004 BEE CAVE RD.
BLDG. 3, STE. 330
AUSTIN, TX 78746

CONTRACTOR
MERCK CONTRACTING
P.O. BOX 1105
WACO, TX 78703

BOULDER PLAN
ASPEN HEIGHTS TSU
201 COPPER BEECH DRIVE
SAN MARCOS, TX 78666
CLIENT: BRECKENRIDGE

JOB No:1012049056.201
DATE: 10-06-10
DRAWN: EE
CHECK:
A 12-16-10 FLR/RF TRUSSES EE
B 01-07-11 BARTOP WALLS EE

1
SHEET 1 OF 6

P:\2011\11750\n\2011.10.13\Floor Plans\Boulder Plan.dwg, 1:1

CEILING AND CEILING JOISTS

SPECIES AND GRADE: #3 S.P. FOR SPANS UNDER 8' U.N.O.
#2 S.P. FOR SPANS OVER 8' U.N.O.
SIZE AND SPACING: 2x6 @ 24" O.C. U.N.O.
CEILING SHEATHING: 1/2" GYPSUM PANELS

HEADER NOTES:

HEADERS BELOW FLOOR SYSTEM HAVE NOT BEEN DESIGNED TO SUPPORT CONCENTRATED LOADS IMPOSED FROM ABOVE. FLOOR SYSTEM DESIGNER TO DETERMINE HEADER SIZE FOR ALL HEADERS SUPPORTING CONCENTRATED LOADS. NON-LOAD BEARING HEADERS MAY BE FRAMED WITH FLAT 2x4. REFER TO TRUSS DESIGN TO DETERMINE LOAD BEARING POINTS.

TREATED LUMBER NOTES:

ALL NAILS, SCREWS, HANGERS, ETC. INSTALLED WITH TREATED LUMBER TO COMPLY WITH APPROPRIATE ASTM STANDARDS. EG. FASTENERS TO COMPLY WITH ASTM A153, HANGERS TO COMPLY WITH ASTM A653, OR ASTM A123.

MLAW TO REVIEW TRUSS LAYOUT DESIGN FOR STRUCTURAL INTEGRITY INTERRELATED TO FRAMING DESIGN

THIS PLAN IS VALID IN BELL, BEXAR, COMAL, HAYS, MCLENNAN, MILAM, TRAVIS, AND WILLIAMSON COUNTIES.

LEGEND

- DEAD LOAD / SOURCE / LIVE LOAD — POINT LOAD
- ENGINEERED BEAM
- L/XXX L/XXX DΔ=X.XX TΔ=X.XX DEFLECTION CRITERIA
- DOUBLE JOIST
- CEILING LINE
- WALL STACKED ON LOWER WALL
- WALL STACKED ON LOWER BEAM

LEVEL 2 CEILING FRAMING
1/4" = 1'-0"

MLAW
CONSULTANTS AND ENGINEERS
2804 LONGHORN BLVD.
AUSTIN, TEXAS 78758
(512) 835-7000

PROPRIETOR
BRECKENRIDGE PROPERTIES
7004 BEE CAVE RD.
BLDG. 3, STE. 330
AUSTIN, TX 78746

CONTRACTOR
MERCK CONTRACTING
P.O. BOX 1105
WACO, TX 78703

BOULDER PLAN
ASPEN HEIGHTS TSU
201 COPPER BEECH DRIVE
SAN MARCOS, TX 78666
CLIENT: BRECKENRIDGE

JOB No:1012049056.201
DATE: 10-06-10
DRAWN:EE
CHECK:
A 12-16-10 FLR/RF TRUSSES EE
B 01-07-11 BARTOP WALLS EE

2
SHEET 2 OF 6

P:\2011\1175\in\2011.10.13\Floor Plans\Boulder Plan.dwg, 1:1

THIS ROOF SYSTEM DESIGNED FOR COMPOSITION ROOF. IF TILE IS TO BE USED, OR OTHER COVERING EXCEEDING 5 PSF, CONTACT ENGINEER FOR REDESIGN

ROOF AND RAFTERS

SPECIES AND GRADE: #3 S.P. FOR SPANS UNDER 8' U.N.O.
#2 S.P. FOR SPANS OVER 8' U.N.O.

SIZE AND SPACING:

RAFTERS	2x6 @ 24" O.C. U.N.O.
HIPS, VALLEYS AND RIDGES	PER FRAMING DETAILS
ROOF SHEATHING	7/16" STRUCT. PANEL

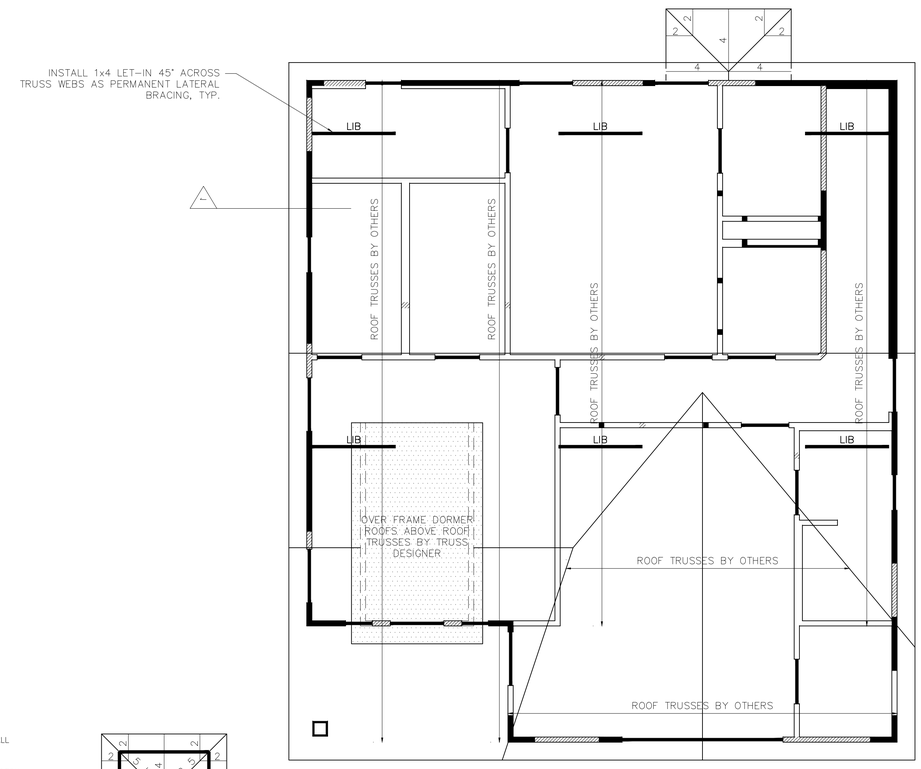

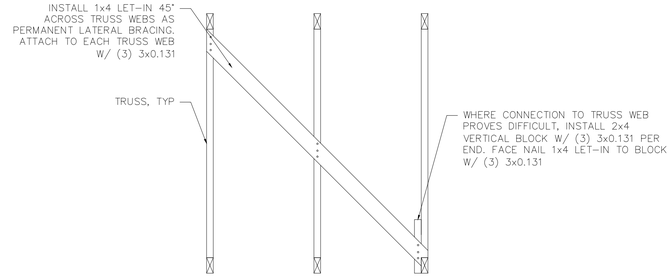

1 1x4 TRUSS BRACING DETAIL
N.T.S.

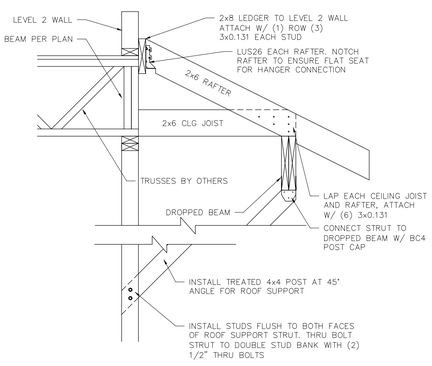

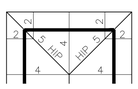

ROOF PLAN

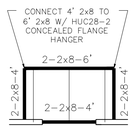

CEILING PLAN

TYPICAL PATIO REAR PATIO ROOF CONNECTION DETAILS
N.T.S.

TREATED LUMBER NOTES:

ALL NAILS, SCREWS, HANGERS, ETC. INSTALLED WITH TREATED LUMBER TO COMPLY WITH APPROPRIATE ASTM STANDARDS. EG. FASTENERS TO COMPLY WITH ASTM A153, HANGERS TO COMPLY WITH ASTM A653, OR ASTM A123.

MLAW TO REVIEW TRUSS LAYOUT DESIGN FOR STRUCTURAL INTEGRITY INTERRELATED TO FRAMING DESIGN

THIS PLAN IS VALID IN BELL, BEXAR, COMAL, HAYS, MCLENNAN, MILAM, TRAVIS, AND WILLIAMSON COUNTIES.

LEGEND

	ROOF BRACE
DEAD LOAD / LIVE LOAD	POINT LOAD
	ENGINEERED BEAM
	DOUBLE JOIST
	WALL STACKED ON LOWER WALL
	WALL STACKED ON LOWER BEAM

ROOF FRAMING
1/4" = 1'-0"

MLAW
CONSULTANTS AND ENGINEERS
2804 LONGHORN BLVD.
AUSTIN, TEXAS 78758
(512) 835-7000

PROPRIETOR
BRECKENRIDGE PROPERTIES
7004 BEE CAVE RD.
BLDG. 3, STE. 330
AUSTIN, TX 78746

CONTRACTOR
MERCK CONTRACTING
P.O. BOX 1105
WACO, TX 78703

BOULDER PLAN

ASPEN HEIGHTS TSU
201 COPPER BEECH DRIVE
SAN MARCOS, TX 78666

CLIENT: BRECKENRIDGE

JOB No:1012049056.201
DATE: 10-06-10
DRAWN: EE
CHECK:

A 12-16-10 FLR/RF TRUSSES EE
B 01-07-11 BARTOP WALLS EE

3
SHEET 3 OF 6

P:\2011\1175\lw\2011.10.13\Floor Plans\Boulder Plan.dwg, 1:1

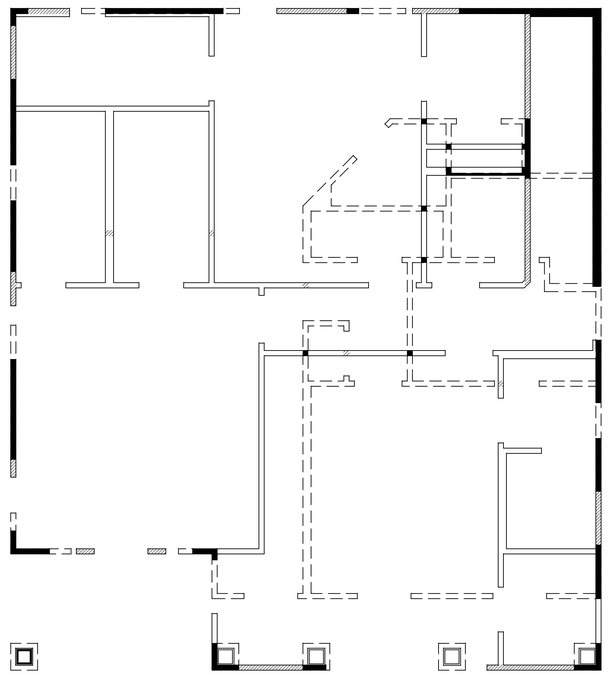

THIS PLAN IS VALID IN BELL, BEXAR, COMAL, HAYS, MCLENNAN, MILAM, TRAVIS, AND WILLIAMSON COUNTIES.

LEGEND

- LOWER LEVEL
- UPPER LEVEL
- WALL STACKED ON LOWER WALL
- WALL STACKED ON LOWER BEAM

OVERLAY
1/4" = 1'-0"

MLAW
CONSULTANTS AND ENGINEERS
2804 LONGHORN BLVD.
AUSTIN, TEXAS 78758
(512) 835-7000

PROPRIETOR
BRECKENRIDGE PROPERTIES
7004 BEE CAVE RD.
BLDG. 3, STE. 330
AUSTIN, TX 78746

CONTRACTOR
MERCK CONTRACTING
P.O. BOX 1105
WACO, TX 78703

BOULDER PLAN

ASPEN HEIGHTS TSU
201 COPPER BEECH DRIVE
SAN MARCOS, TX 78666

CLIENT: BRECKENRIDGE

JOB No:1012049056.201
DATE: 10-06-10
DRAWN: EE
CHECK:

A 12-16-10 FLR/RF TRUSSES EE
B 01-07-11 BARTOP WALLS EE

4
SHEET 4 OF 6

P:\2011\1175\in\2011.10.13\Floor Plans\Boulder Plan.dwg, 1:1

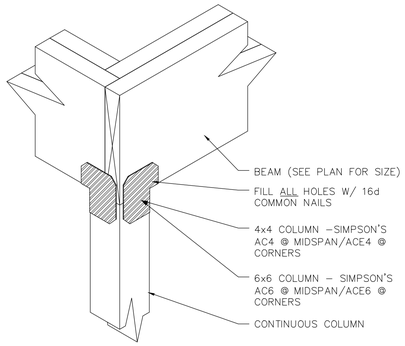

BEAM / COLUMN TOP CONNECTION
N.T.S.

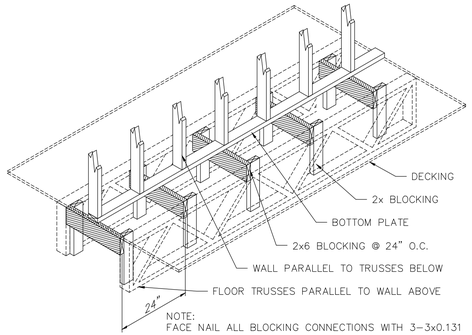

PARALLEL WALL/TRUSS BLOCKING
N.T.S.

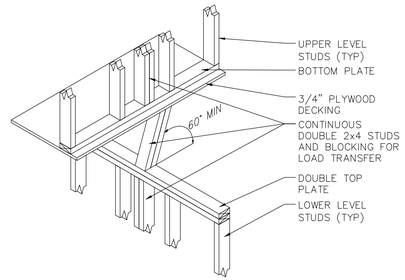

PERPENDICULAR STACKED WALL SUPPORT
N.T.S.

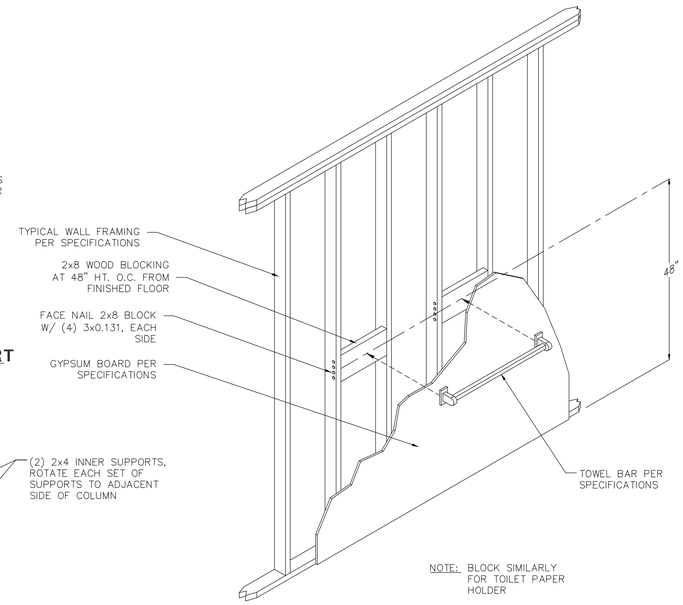

TYPICAL TOWEL BAR IN-WALL BLOCKING
N.T.S.

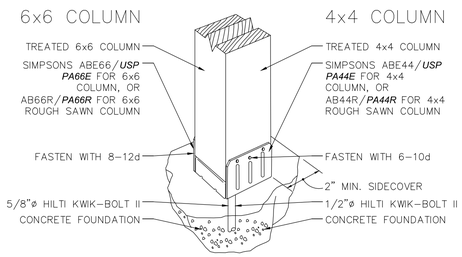

COLUMN BASE CONNECTION
N.T.S.

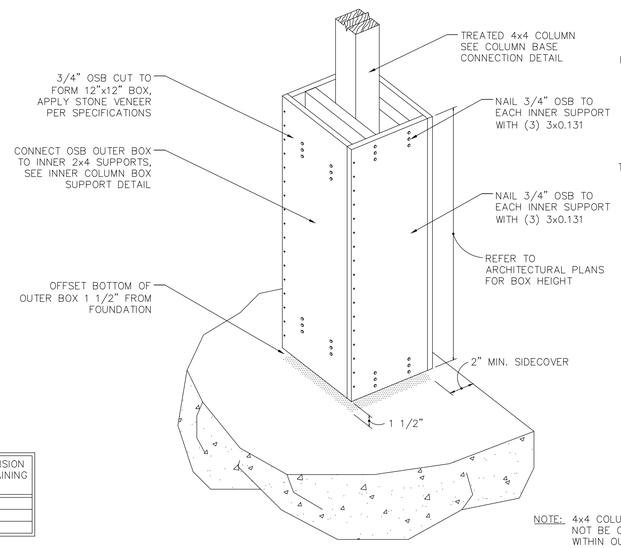

OUTER COLUMN BOX DETAIL
N.T.S.

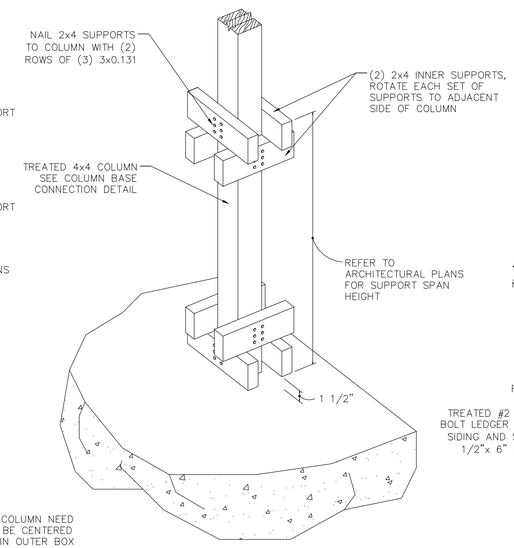

NOTE: 4x4 COLUMN NEED NOT BE CENTERED WITHIN OUTER BOX

INNER COLUMN BOX SUPPORT DETAIL
N.T.S.

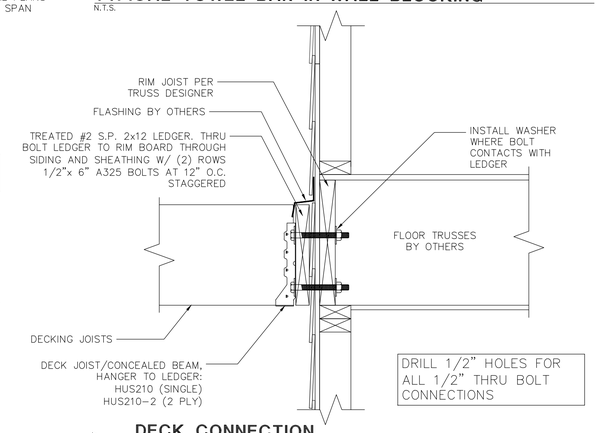

DECK CONNECTION
N.T.S.

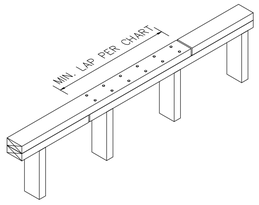

LENGTH OF TOP PLATE LAP @ SPLICE	BUILDING DIMENSION OF WALL CONTAINING TOP PLATE
4' LAP	< 40'
6' LAP	40' ≥ 60'
8' LAP	60' ≥ 80'

* TOP PLATE TO BE CONNECTED AT SPLICE W/ 2 ROWS OF 3x0.131 @ 4" O.C.(EACH SIDE @ INTERSECTION). SPLICES NEED NOT OCCUR OVER A STUD

TOP PLATE SPLICE DETAIL
N.T.S.

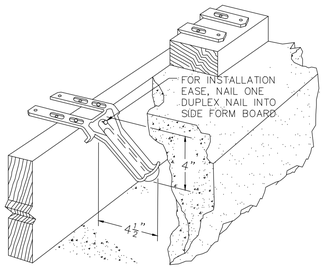

OPTIONAL ANCHOR BOLT ALTERNATIVE (CUT AWAY)
N.T.S.

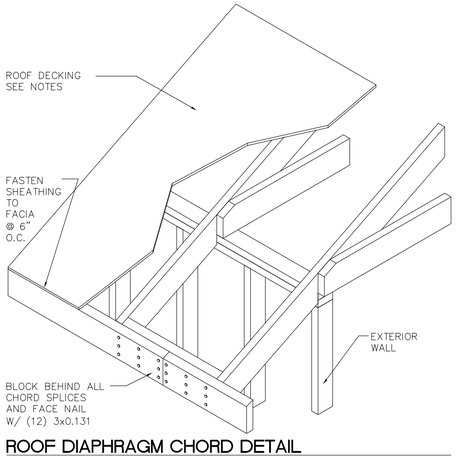

ROOF DIAPHRAGM CHORD DETAIL
SHEAR CAPACITY: 238 PLF

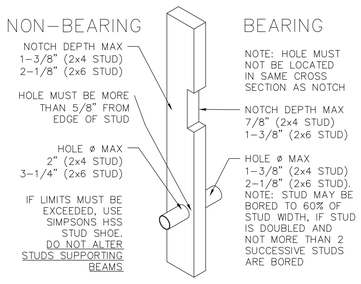

BORED/NOTCHED STUD
N.T.S.

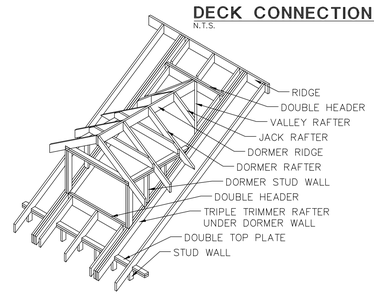

TYPICAL DORMER SUPPORT DETAIL
N.T.S.

THIS PLAN IS VALID IN BELL, BEXAR, COMAL, HAYS, MCLENNAN, MILAM, TRAVIS, AND WILLIAMSON COUNTIES.

FRAMING DETAILS
1/4" = 1'-0"

MLAW
CONSULTANTS AND ENGINEERS
2804 LONGHORN BLVD.
AUSTIN, TEXAS 78758
(512) 835-7000

PROPRIETOR
BRECKENRIDGE PROPERTIES
7004 BEE CAVE RD.
BLDG. 3, STE. 330
AUSTIN, TX 78746

CONTRACTOR
MERCK CONTRACTING
P.O. BOX 1105
WACO, TX 76703

BOULDER PLAN
ASPEN HEIGHTS TSU
201 COPPER BEECH DRIVE
SAN MARCOS, TX 78666
CLIENT: BRECKENRIDGE

JOB No:1012049056.201
DATE: 10-06-10
DRAWN: EE
CHECK:
A 12-16-10 FLR/RF TRUSSES EE
B 01-07-11 BARTOP WALLS EE

5
SHEET 5 OF 6

P:\2011117516\2011.10.13\Floor Plans\Boulder Plan.dwg, 1:1

FLOOR AND FLOOR JOISTS

UNLESS NOTED OTHERWISE ON PLAN (ALSO SEE MPCW FLOOR TRUSSES, WHERE APPLICABLE):

SPECIES AND GRADE: #2 SOUTHERN PINE U.N.O.

SIZE AND SPACING: 2x12 @ 24" O.C. U.N.O.

FLOOR SHEATHING: 3/4" TONGUE AND GROOVE SIZED FOR SPACING

FLOOR DECKING: FLAT 2x6 W/ 1/8" GAPS FOR EXTERIOR APPLICATIONS

1. **EXTERIOR DECKS.** REFER TO CONNECTION DETAILS PER PLAN.
2. **BEARING.** AT END OF EACH JOIST, BEAR A MINIMUM LENGTH OF 1-1/2". WHERE JOISTS FRAME FROM OPPOSITE SIDES OVER A BEARING SUPPORT, LAP MINIMUM 3" AND FASTEN. WHERE JOISTS FRAME INTO THE SIDE OF A GIRDER, USE JOIST HANGER IN ACCORDANCE WITH THE SCHEDULE.
3. **LATERAL RESTRAINT AT SUPPORTS.** LATERALLY SUPPORT JOISTS AT THE ENDS BY FULL DEPTH SOLID BLOCKING, ATTACHMENT TO A HEADER, BAND OR RIM JOIST, OR TO AN ADJOINING STUD.
4. **TOPPING SLABS.** DO NOT USE TOPPING SLABS UNLESS NOTED OTHERWISE ON PLAN.
5. **ALLOWABLE JOIST SPANS:**

RESIDENTIAL LIVING
IRC R502.3.1(2) LL=40 PSF, DL=10 PSF,
(LIGHT FLOOR COVERING)

Δ = L/360

#2 S.P.	2x6	2x8	2x10	2x12
12" O.C.	10'-9"	14'-2"	18'-0"	21'-9"
16" O.C.	9'-9"	12'-10"	16'-1"	18'-10"
19.2" O.C	9'-2"	12'-1"	14'-8"	17'-2"
24" O.C.	8'-6"	11'-0"	13'-1"	15'-5"

RESIDENTIAL SLEEPING
IRC R502.3.1(1) LL=30 PSF, DL=10 PSF,
(LIGHT FLOOR COVERING)

Δ = L/360

#2 S.P.	2x6	2x8	2x10	2x12
12" O.C.	11'-10"	15'-7"	19'-10"	24'-2"
16" O.C.	10'-9"	14'-2"	18'-0"	21'-1"
19.2" O.C.	10'-1"	13'-4"	16'-5"	19'-3"
24" O.C.	9'-4"	12'-4"	14'-8"	17'-2"

RESIDENTIAL LIVING
IRC R502.3.1(2) LL=40 PSF, DL=20 PSF,
(HEAVY FLOOR COVERING)

Δ = L/360

#2 S.P.	2x6	2x8	2x10	2x12
12" O.C.	10'-9"	14'-2"	16'-11"	19'-10"
16" O.C.	9'-6"	12'-4"	14'-8"	17'-2"
19.2" O.C	8'-8"	11'-3"	13'-5"	15'-8"
24" O.C.	7'-9"	10'-0"	12'-0"	14'-0"

RESIDENTIAL SLEEPING
IRC R502.3.1(1) LL=30 PSF, DL=20 PSF,
(HEAVY FLOOR COVERING)

Δ = L/360

#2 S.P.	2x6	2x8	2x10	2x12
12" O.C.	11'-10"	15'-7"	18'-7"	21'-9"
16" O.C.	10'-5"	13'-6"	16'-1"	18'-10"
19.2" O.C	9'-6"	12'-4"	14'-8"	17'-2"
24" O.C.	8'-6"	11'-0"	13'-1"	15'-5"

RESIDENTIAL LIVING
IRC R502.3.1(2) LL=40 PSF, DL=10 PSF,
(LIGHT FLOOR COVERING)

Δ = L/360

#3 S.P.	2x6	2x8	2x10	2x12
12" O.C.	9'-4"	11'-11"	14'-0"	16'-8"
16" O.C.	8'-1"	10'-3"	12'-2"	14'-6"
19.2" O.C.	7'-4"	9'-5"	11'-1"	13'-2"
24" O.C.	6'-7"	8'-5"	9'-11"	11'-10"

RESIDENTIAL SLEEPING
IRC R502.3.1(1) LL=30 PSF, DL=10 PSF,
(LIGHT FLOOR COVERING)

Δ = L/360

#3 S.P.	2x6	2x8	2x10	2x12
12" O.C.	10'-5"	13'-3"	15'-8"	18'-8"
16" O.C.	9'-0"	11'-6"	13'-7"	16'-2"
19.2" O.C	8'-3"	10'-6"	12'-5"	14'-9"
24" O.C.	7'-4"	9'-5"	11'-1"	13'-2"

RESIDENTIAL LIVING
IRC R502.3.1(2) LL=40 PSF, DL=20 PSF,
(HEAVY FLOOR COVERING)

Δ = L/360

#3 S.P.	2x6	2x8	2x10	2x12
12" O.C.	8'-6"	10'-10"	12'-10"	15'-3"
16" O.C.	7'-4"	9'-5"	11'-1"	13'-2"
19.2" O.C	6'-9"	8'-7"	10'-1"	12'-1"
24" O.C.	6'-0"	7'-8"	9'-1"	10'-9"

RESIDENTIAL SLEEPING
IRC R502.3.1(1) LL=30 PSF, DL=20 PSF,
(HEAVY FLOOR COVERING)

Δ = L/360

#3 S.P.	2x6	2x8	2x10	2x12
12" O.C.	9'-4"	11'-11"	14'-0"	16'-8"
16" O.C.	8'-1"	10'-3"	12'-2"	14'-6"
19.2" O.C.	7'-4"	9'-5"	11'-1"	13'-2"
24" O.C.	6'-7"	8'-5"	9'-11"	11'-10"

WOOD WALL FRAMING

1. **R601.2.1 COMPRESSIBLE MATERIALS.** MATERIALS THAT COMPRESS MORE THAN 1/32 INCH WHEN SUBJECTED TO 50 PSI SHALL NOT EXTEND BENEATH WALLS.
2. **R602.1.1 END JOINTED LUMBER.** APPROVED END JOINTED LUMBER MAY BE USED INTERCHANGABLY WITH SOLID-SAWN MEMBERS OF THE SAME SPECIES AND GRADE.
3. **R602.2 GRADE.** STUDS SHALL BE A MIN. #2, STANDARD OR STUD GRADE S.P.F.
4. **R602.3.1 STUD SIZE, HEIGHT, AND SPACING.**

MAX. ALLOWABLE LATERALLY UNSUPPORTED LENGTHS OF WOOD WALL STUDS FOR THE GIVEN STUD SIZE AND SPACING:

SUPPORTING ROOF ONLY	
2x4 @ 16" O.C.	12'-0"
2x6 @ 16" O.C.	18'-0"
2x6 @ 12" O.C.	20'-0"
2x6 @ 8" O.C.	24'-0"

SUPPORTING ONE FLOOR AND A ROOF	
2x4 @ 16" O.C.	10'-0"
2x6 @ 16" O.C.	18'-0"
2x6 @ 12" O.C.	20'-0"
2x6 @ 8" O.C.	24'-0"

SUPPORTING TWO FLOORS AND A ROOF	
2x6 @ 16" O.C.	14'-0"
2x6 @ 12" O.C.	16'-0"
2x6 @ 12" O.C.	18'-0"
2x6 @ 8" O.C.	20'-0"

5. **R602.3.2 TOP PLATE.** CAP WOOD STUD WALLS WITH A DOUBLE TOP PLATE INSTALLED TO PROVIDE OVERLAPPING AT CORNERS AND INTERSECTIONS WITH BEARING PARTITIONS. END JOINTS IN TOP PLATES SHALL BE OFFSET AT LEAST 24". JOINTS NEED NOT OCCUR OVER STUDS. PLATES TO BE SAME SIZE AS STUDS AND MIN UTILITY GRADE S.P.F.
6. **R602.6.1 DRILLING AND NOTCHING OF TOP PLATE.** WHEN TOP PLATE WIDTH IS REDUCED BY MORE THAN 50%, INSTALL SIMPSON RPS/USP ***KRPS*** TIES ACROSS THE NOTCH AND TO THE PLATE AT EACH SIDE OF THE OPENING WITH NOT LESS THAN EIGHT 16d NAILS AT EACH SIDE.
7. **BOTTOM PLATES.**
PLATES IN CONTACT WITH CONCRETE MUST BE PRESSURE TREATED IN ACCORDANCE WITH APPROVED STANDARDS AND SHALL BE ANCHORED TO CONCRETE BY THE FOLLOWING METHODS:
(a) EXTERIOR PLATES IN CONTACT WITH CONCRETE:
(i) 1/2" ANCHOR BOLTS, MIN. 7" EMBED SPACED 6'-0" ON CENTER, MAX. WITH 3x3x3 STEEL PLATE WASHERS BETWEEN THE BOTTOM PLATE AND NUT.
(ii) SIMPSON MAS/USP ***FA3*** MUDSILL ANCHORS INSTALLED PER MANUFACTURERS SPECIFICATIONS, AND SPACED 5' ON CENTER, MAX.
IF ONE OF THE ABOVE METHODS CANNOT BE PLACED BETWEEN 4" AND 12" FROM THE ENDS OF EACH PLATE SECTION, USE (2) SIMPSONS PDPWL-300(OR EQUAL) PLACED @ 6" AND 10" FROM EACH END OF SILL PLATES.
(b) INTERIOR NON-SHEARWALL PLATES IN CONTACT WITH CONCRETE SHALL BE ANCHORED TO CONCRETE W/ SIMPSONS PDPWL-300(OR EQUAL) @ 32" O.C.
(c) INTERIOR SHEARWALL PLATES SHALL BE ANCHORED TO CONCRETE W/ SIMPSONS PDPWL-300(OR EQUAL) @ 8" O.C., U.N.O.
(d) BOTTOM PLATES IN CONTACT WITH LUMBER TO BE FASTENED PER FASTENER SCHEDULE.
8. **PLATE HEIGHT.** UNLESS NOTED OTHERWISE, WALLS ARE PLATFORM FRAMED WHEREVER APPLICABLE. SEE ARCHITECTURAL DRAWINGS FOR EXACT DIMENSION AND STRUCTURAL DRAWINGS FOR ACCEPTABLE MAXIMUM. CONTACT ENGINEER IF DISCREPANCIES ARE FOUND.
9. **OPENINGS.** OPENINGS SHALL BE FRAMED WITH HEADER AND TRIMMER JOISTS. IF HEADER SPAN IS LESS THAN 4', THE HEADER MAY BE A SINGLE MEMBER THE SAME SIZE AS RAFTER. A SINGLE TRIMMER MAY BE USED TO CARRY A SINGLE HEADER THAT IS LOCATED WITHIN 3' OF TRIMMER BEARING. IF HEADER SPAN EXCEEDS 4', THE HEADER AND TRIMMERS SHALL BE DOUBLED AND JOIST HANGERS SHALL BE INSTALLED.
10. **UNEXPECTED CONDITIONS.** IF CONDITIONS ARISE THAT ARE NOT COVERED BY THIS PLAN, CONTACT THE ENGINEER AT ONCE FOR ADDITIONAL INSTRUCTIONS.

ENGINEERED BEAMS

1. **CAPACITY.**
(a) ALL SOLID SAWN LUMBER BEAMS/HEADERS LABELED ON PLAN AS 2x10 OR GREATER,TO BE #2 SOUTHERN PINE U.N.O.
(b) ALL STRUCTURAL COMPOSITE LUMBER USED IN CONSTRUCTION MUST HAVE THE FOLLOWING MINIMUM CAPACITIES:
FIBER BENDING (Fb) = 2600 PSI
MODULUS OF ELASTICITY (E) = 1,900,000 PSI
SHEAR STRENGTH (Fv) = 285 PSI
COMPRESSION PERPENDICULAR (Fc⊥) = 170 PSI
2. **SUPPORT.** FOR BEAMS BEARING ON STUD WALLS, THERE SHALL BE THE SAME NUMBER OF STUDS LOCATED DIRECTLY UNDER THE BEAM AS THE NUMBER OF BEAM PLYS.
3. **ELEVATION.** BEAMS SHOWN ON PLAN ARE DROPPED BEAMS OR HEADERS UNLESS NOTED AS CLD (CONCEALED) OR FLT (FLOATING).
4. **FLOATING BEAMS.** FLOATING BEAMS SHALL HAVE A MINIMUM CLEARANCE OF 1-1/2" FROM BOTTOM OF BEAM.
5. **LATERAL RESTRAINT.** ALL BEAMS SHALL BE LATERALLY BRACED AT ALL SUPPORT POINTS. FLOATING BEAMS SHOULD HAVE ADDITIONAL LATERAL SUPPORT AT 1/3 SPAN POINTS. ALL KICKERS SHOULD BE PLACED AT AN ANGLE BETWEEN 45° AND HORIZONTAL.
6. **SUBSTITUTIONS.** GLU-LAM BEAMS OR OTHER APPROVED ENGINEERED STRUCTURAL COMPOSITE LUMBER MAY BE SUBSTITUTED FOR BEAMS NOTATED ON PLAN, PROVIDED THAT THE STRENGTH VALUES ARE EQUAL TO OR GREATER THAN THE VALUES LISTED ABOVE.

CEILING AND CEILING JOISTS

1. **LOADING.** ATTIC AREAS ARE DESIGNED AS UNINHABITABLE WITH LIMITED STORAGE (MAXIMUM LIVE LOAD = 20 PSF, DEAD LOAD = 10 PSF)
2. **R802.3.1 CEILING JOIST CONNECTIONS.** WHERE CEILING JOISTS FRAME FROM OPPOSITE SIDES OVER A BEARING SUPPORT, JOISTS SHALL BE LAPPED 3" AND FASTENED. WHERE JOISTS ARE NOT CONNECTED TO RAFTERS AT THE TOP PLATE, JOISTS SHALL BE INSTALLED HIGHER IN THE ATTIC TO PROVIDE A CONTINUOUS TIE. WHERE JOISTS ARE NOT PARALLEL TO RAFTERS, 2x4 RAFTER TIES SHALL BE INSTALLED
3. **BEARING.** AT END OF EACH JOIST, BEAR A MINIMUM LENGTH OF 1-1/2". WHERE JOISTS FRAME FROM OPPOSITE SIDES OVER A BEARING SUPPORT, LAP MINIMUM 3". WHERE JOIST FRAME INTO THE SIDE OF A GIRDER, USE SIMPSON HANGER IN ACCORDANCE WITH THE SCHEDULE.
4. **R802.8 LATERAL SUPPORT.** RAFTERS AND CEILING JOISTS 2x10 OR GREATER SHALL BE PROVIDED WITH LATERAL SUPPORT AT BEARING POINTS TO PREVENT ROTATION. SUPPORT JOISTS BY SOLID BLOCKING AT SUPPORT POINTS, DIAGONAL BRIDGING, OR A CONTINUOUS 1x4 RAT RUN NAILED ACROSS JOISTS AT INTERVALS NOT EXCEEDING 8'.
5. **STABILITY OF NONBEARING WALLS.** WHERE CEILING JOISTS ARE PARALLEL TO NONBEARING WALL, BRACE TOP OF WALL WITH 2x4 BLOCKING AT 24" O.C. BETWEEN JOISTS.
6. **R802.9 FRAMING OF OPENINGS.** OPENINGS IN ROOF AND CEILING FRAMING SHALL BE FRAMED WITH DOUBLE HEADER AND DOUBLE TRIMMER JOISTS.
7. **MECHANICAL EQUIPMENT SUPPORT.** IF NOT DESIGNATED ON PLAN, ALL MECHANICAL EQUIPMENT AND WATER HEATERS SHALL BE SUPPORTED BY MIN. DOUBLE 2x10 JOISTS @ 24" O.C.
8. **R301.5 LIVE LOADS.** TABLE R301.5b ATTICS WITHOUT STORAGE ARE THOSE WHERE THE MAXIMUM CLEAR HEIGHT BETWEEN JOIST AND RAFTER IS LESS THAN 42".
9. **R807.1 ATTIC ACCESS.** A ROUGH FRAMED OPENING NOT LESS THAN 22"x30" SHALL BE PROVIDED TO ATTIC AREAS THAT EXCEED 30 SQUARE FEET AND HAVE A VERTICAL HEIGHT OF 30" OR MORE.
10. **R802.4 ALLOWABLE CEILING JOIST SPANS.** SPANS FOR CEILING JOISTS SHALL BE IN ACCORDANCE WITH TABLES R802.4(1) AND R802.4(2)

IRC R802.4(2) LL=20 PSF, DL=10 PSF,
(LIMITED STORAGE)

Δ = L/240

#2 S.P.	2x6	2x8	2x10	2x12
12" O.C.	15'-6"	20'-1"	23'-11"	26'-0"
16" O.C.	13'-6"	17'-5"	20'-9"	24'-4"
19.2" O.C	12'-3"	15'-10"	18'-11"	22'-2"
24" O.C.	11'-0"	14'-2"	16'-11"	19'-10"

IRC R802.4(2) LL=20 PSF, DL=10 PSF,
(LIMITED STORAGE)

Δ = L/240

#3 S.P.	2x6	2x8	2x10	2x12
12" O.C.	12'-0"	15'-4"	18'-1"	21'7"
16" O.C.	10'-5"	13'-3"	15'-8"	18'-8"
19.2" O.C	9'-6"	12'-1"	14'-4"	17'-1"
24" O.C.	8'-6"	10'-10"	12'-10"	15'-3"

JOIST AND BEAM HANGERS

1. HANGERS MUST BE INSTALLED USING THE SPECIFIED FASTENERS IN ALL HOLES, INCLUDING TRIANGULAR HOLES.
2. ALL SPECIFIED FASTENERS MUST BE INSTALLED PRIOR TO LOADING THE CONNECTION.
3. TECO NAILS SHOULD ONLY BE POWER DRIVEN USING PNUEMATIC TOOLS CAPABLE OF SUPPORTING POSITIVE PLACEMENT MECHANISM TO ENSURE NAILS ARE DRIVEN INTO PREFORMED HANGER NAIL HOLES.
4. TECO NAILS MAY NOT BE SUBSTITUTED FOR COMMON NAILS IN DOUBLE SHEAR HANGERS (i.e. LUS, MUS, HUS, HHUS, HGUS)
5. JOISTS MUST BEAR COMPLETELY ON CONNECTOR SEAT, AND THE GAP BETWEEN JOIST AND GIRDER MUST NOT EXCEED 1/8".

FACE MOUNT HANGER SCHEDULE

MEMBER	SIMPSONS PRODUCT NUMBER	CAPACITY (100%)	*USP PRODUCT NUMBER*	*CAPACITY (100%)*
2x4	LU24	530	*JL24*	*545*
2x6, 8	LU26	800	*JL26*	*815*
2x10	LU28	1065	*JL28*	*1360*
2x12	LU210	1330	*JL210*	*1905*
2-2x4	U24-2	530	*SUH24-2*	*830*
2-2x6, 8	U26-2	1065	*SUH26-2*	*1380*
2-2x10, 12	U210-2	1860	*SUH210-2*	*1930*
2-1.75x11.25	HGUS48	6805	*THDH410*	*8170*
2-1.75x14, 16	HGUS410	8780	*THDH412*	*9875*
2-1.75x18	HGUS414	10015	*THDH414*	*11100*
3-2x10, 12	U210-3	1860	*SUH210-3*	*1930*
3-1.75x11.25	HGUS5.50/12	9155	*THDH610*	*8640*
3-1.75x14-18	HGUS5.50/14	10015	*THDH612*	*9935*
4-2x10, 12	HHUS210-4	5190	*HD210-4*	*3360*
4-1.75x11.25	HGUS7.25/12	9835	*THDH7212*	*9875*
4-1.75x14-18	HGUS7.25/14	11110	*THDH7214*	*11580*
ALL 5 PLY LVL	HHGU9.00-SDS	17845	*KEG9*	*18185*
45° SKEWED HANGERS				
2x4	SUR/L24	530	*SKH24R/L*	*510*
2x6, 8	SUR/L26	800	*SKH26R/L*	*830*
2x10, 12	SUR/L210	1330	*SHK210R/L*	*1790*
2-2x6, 8	SUR/L26-2	1065	*SKH26R/L-2*	*830*
2-2x10, 12	SUR/L210-2	1860	*SKH210R/L-2*	*1930*
2-1.75x11.25, 14	HSUR/L410	2680	*SKH410R/L*	*2240*
2-1.75x16, 18	HSUR/L414	3485	*SKH414R/L*	*3080*

ROOF AND RAFTERS

1. **ROOFING MATERIAL AND MAXIMUM WEIGHT.** COMPOSITION ROOF COVERING NOT TO EXCEED 5 PSF. TILE ROOF COVERING NOT TO EXCEED 15 PSF. CONTACT ENGINEER AT ONCE IF DISCREPANCIES ARE FOUND.
2. **R802.3.1 CEILING JOIST AND RAFTER CONNECTIONS.** FASTEN CEILING JOISTS AND RAFTERS TOGETHER AND TO THE WALL TOP PLATE. CREATE CONTINUITY FROM ONE SIDE OF ROOF TO OPPOSITE BY NAILING RAFTERS TO ADJACENT CEILING JOISTS. MIN. 1x4 COLLAR TIES @ 48" O.C. SHALL BE FASTENED TO OPPOSING RAFTERS IN THE UPPER THIRD OF THE ATTIC. WHERE RAFTER/JOIST ASSEMBLY IS EXPOSED TO WIND LOADS FROM BELOW, SUCH AS PORCHES AND PATIOS, CONNECT EACH ASSEMBLY TO BEARING LOCATION WITH SIMPSON H2.5/USP RT7 HURRICANE TIE.
3. **ROOF BRACES.** BRACE ONLY AS SHOWN AND PROVIDE TWO STUDS IN WALLS DIRECTLY BENEATH BRACE POINTS. FOR BRACE LENGTHS UP TO 12', USE A 2x4 BRACE WITH A 2x6 STIFFBACK. FOR GREATER THAN 12', USE A 2x6 WITH A 2x6 STIFFBACK.
4. **R802.5.1 PURLINS.** PURLINS SHALL BE INSTALLED WHERE SHOWN ON PLAN. PURLINS SHALL BE CONTINUOUS, THE SAME SIZE AS THE SUPPORTED RAFTERS AND BRACED AT 48" O.C. TO DESIGNATED LOCATIONS. SLOPE BETWEEN 45° AND VERTICAL.
5. **R802.5 ALLOWABLE RAFTER SPANS.** SPANS FOR RAFTERS SHALL BE IN ACCORDANCE WITH TABLES R802.5.1(1) AND R802.5.1(2). SHOWN TABLES ASSUME CEILING JOISTS ARE LOCATED AT THE TOP PLATE OF RAFTER SUPPORT WALLS.
6. **OPENINGS.** OPENINGS SHALL BE FRAMED WITH HEADER AND TRIMMER JOISTS. IF HEADER SPAN IS LESS THAN 4', THE HEADER MAY BE A SINGLE MEMBER THE SAME SIZE AS RAFTER. A SINGLE TRIMMER MAY BE USED TO CARRY A SINGLE HEADER THAT IS LOCATED WITHIN 3' OF TRIMMER BEARING. IF HEADER SPAN EXCEEDS 4', THE HEADER AND TRIMMERS SHALL BE DOUBLED AND JOIST HANGERS SHALL BE INSTALLED.

IRC R802.5.1(1) LL=20 PSF, DL=10 PSF,
(NOT ATTACHED TO CEILING)

Δ = L/180

#2 S.P.	2x6	2x8	2x10	2x12
12" O.C.	17'-0"	22'-5"	26'-0"	26'-0"
16" O.C.	15'-1"	19'-5"	23'-2"	26'-0"
19.2" O.C	13'-9"	17'-9"	21'-2"	24'-10"
24" O.C.	12'-3"	15'-10"	18'-11"	22'-2"

IRC R802.5.1(2) LL=20 PSF, DL=10 PSF,
(ATTACHED TO CEILING)

Δ = L/240

#2 S.P.	2x6	2x8	2x10	2x12
12" O.C.	15'-6"	20'-5"	26'-0"	26'-0"
16" O.C.	14'-1"	18'-6"	23'-2"	26'-0"
19.2" O.C	13'-3"	17'-5"	21'-2"	24'-10"
24" O.C.	12'-3"	15'-10"	18'-11"	22'-2"

IRC R802.5.1(1) LL=20 PSF, DL=20 PSF,
(NOT ATTACHED TO CEILING)

Δ = L/180

#2 S.P.	2x6	2x8	2x10	2x12
12" O.C.	15'-1"	19'-5"	23'-2"	26'-0"
16" O.C.	13'-6"	16'-10"	20'-1"	23'-7"
19.2" O.C	11'-11"	15'-4"	18'-4"	21'-6"
24" O.C.	10'-8"	13'-9"	16'-5"	19'-3"

IRC R802.5.1(2) LL=20 PSF, DL=20 PSF,
(ATTACHED TO CEILING)

Δ = L/240

#2 S.P.	2x6	2x8	2x10	2x12
12" O.C.	15'-1"	19'-5"	23'-2"	26'-0"
16" O.C.	13'-6"	16'-10"	20'-1"	23'-7"
19.2" O.C	11'-11"	15'-4"	18'-4"	21'-6"
24" O.C.	10'-8"	13'-9"	16'-5"	19'-3"

IRC R802.5.1(1) LL=20 PSF, DL=10 PSF,
(NOT ATTACHED TO CEILING)

Δ = L/180

#3 S.P.	2x6	2x8	2x10	2x12
12" O.C.	13'-6"	17'-2"	20'-3"	24'-1"
16" O.C.	11'-8"	14'-10"	17'-6"	20'-11"
19.2" O.C	10'-8"	13'-7"	16'-0"	19'-1"
24" O.C.	9'-6"	12'-1"	14'-4"	17'-1"

IRC R802.5.1(2) LL=20 PSF, DL=10 PSF,
(ATTACHED TO CEILING)

Δ = L/240

#3 S.P.	2x6	2x8	2x10	2x12
12" O.C.	13'-6"	17'-2"	20'-3"	24'-1"
16" O.C.	11'-8"	14'-10"	17'-6"	20'-11"
19.2" O.C	10'-8"	13'-7"	16'-0"	19'-1"
24" O.C.	9'-6"	12'-1"	14'-4"	17'-1"

IRC R802.5.1(1) LL=20 PSF, DL=20 PSF,
(NOT ATTACHED TO CEILING)

Δ = L/180

#3 S.P.	2x6	2x8	2x10	2x12
12" O.C.	11'-8"	14'-10"	17'-6"	20'-11"
16" O.C.	10'-1"	12'-10"	15'-2"	18'-1"
19.2" O.C	9'-3"	11'-9"	13'-10"	16'-6"
24" O.C.	8'-3"	10'-6"	12'-5"	14'-9"

IRC R802.5.1(2) LL=20 PSF, DL=20 PSF,
(ATTACHED TO CEILING)

Δ = L/240

#3 S.P.	2x6	2x8	2x10	2x12
12" O.C.	11'-8"	14'-10"	17'-6"	20'-11"
16" O.C.	10'-1"	12'-10"	15'-2"	18'-1"
19.2" O.C	9'-3"	11'-9"	13'-10"	16'-6"
24" O.C.	8'-3"	10'-6"	12'-5"	14'-9"

FASTENER SCHEDULE

DESCR OF BUILDING ELEMENTS	***NUMBER AND TYPE OF FASTENER***
WALL FRAMING	
TOP OR SOLE PLATE TO STUD FACE NAIL	3-3x0.131
TOP OR SOLE PLATE TO STUD TOE NAIL	4-3x0.131
DOUBLE TOP PLATE MIN 24" LAP OF END JOINTS, FACE NAIL	8-3x0.131
CAP/TOP PLATE LAPS AND INTERSECTIONS, FACE NAIL	3-3x0.131 EACH SIDE
1x4 BRACING TO STUDS/PLATES FACE NAIL	2-3x0.131
SOLE PLATE TO JOIST OR BLOCKING @ BRACED PANELS, FACE NAIL	3x0.131 4 PER 16" SPACE
SOLE PLATE TO JOIST OR BLOCKING FACE NAIL	3x0.131 @ 8" O.C.
DOUBLE TOP PLATE, FACE NAIL	3x0.131 @ 12" O.C.
DOUBLE STUDS, FACE NAIL	3x0.131 @ 8" O.C.
CORNER STUDS, FACE NAIL	3x0.131 @ 16" O.C.
HEADER TO KING STUD, TOE NAIL	4-3x0.131
CEILING AND ROOF FRAMING	
CEILING JOIST TO PLATE TOE NAIL	5-3x0.131
CEILING JOIST LAPS OVER WALLS FACE NAIL	4-3x0.131
CEILING JOIST TO PARALLEL RAFTER FACE NAIL	4-3x0.131
COLLAR TIE TO RAFTER, FACE NAIL	4-3x0.131
JACK RAFTER TO HIP, TOE NAIL	4-3x0.131
JACK RAFTER TO HIP, FACE NAIL	3-3x0.131
RAFTER TO TOP PLATE, TOE NAIL	3-3x0.131
RAFTER TO 2x RIDGE, FACE NAIL	3-3x0.131
RAFTER TO 2x RIDGE, TOE NAIL	3-3x0.131
BLOCKING BETWEEN RAFTER TO TOP PLATE, TOE NAIL	4-3x0.131
FLOOR FRAMING	
FLOOR JOIST TO BAND JOIST FACE NAIL	5-3x0.131
FLOOR JOIST TO SILL PLATE TOE NAIL	4-3x0.131
BLOCKING BETWEEN FLOOR JOIST TO SILL PLATE, TOE NAIL	4-3x0.131
BRIDGING TO FLOOR JOIST EACH END, TOE NAIL	3-3x0.120
RIM JOIST TO TOP PLATE, TOE NAIL	3x0.131 @ 6" O.C.
1x6 SUBFLOOR OR LESS TO EACH JOIST, FACE NAIL	2-3x0.131
2x SUBFLOOR TO EACH JOIST, BLIND AND FACE NAIL	3-3x0.131
BUILT UP GIRDERS AND BEAMS FACE NAIL	3x0.131 @ 24" O.C.T&B & 3-3x0.131 @ ENDS

SHEATHING FASTENING REQUIREMENTS

ROOF SHEATHING	
5/16"-1"	REFER TO COMPONENTS AND CLADDING REQUIREMENTS ON UPLIFT DETAILS PAGE.
WALL SHEATHING	
1/2" OR LESS	1-3/4"x16 GA. STAPLES 6" O.C. EDGE, 12" O.C. FIELD
19/32"-5/8"	1-3/4"x16 GA. STAPLES 3" O.C. EDGE, 6" O.C. FIELD
3/4"	1-3/4"x16 GA. STAPLES 3" O.C. EDGE, 6" O.C. FIELD
FLOOR SHEATHING	
3/4"	1-3/4"x16 GA. STAPLES 3" O.C. EDGE, 6" O.C. FIELD

1. THIS FASTENING SCHEDULE DERIVED FROM ICC EVALUATION SERVICE, INC. LEGACY REPORT #NER-272 REVISION A, DATED AUGUST 1, 2004
2. THIS FASTENING SCHEDULE APPLIES TO FRAMING MEMBERS HAVING AN ACTUAL THICKNESS OF 1-1/2" TO 1-3/4"
3. FASTENINGS ABOVE MAY ALSO BE USED FOR OTHER CONNECTIONS THAT ARE NOT LISTED BUT HAVE THE SAME CONFIGURATION AND THE SAME CODE REQUIREMENT FOR FASTENER QUANITY/SPACING AND FASTENER SIZE.
4. STAPLE CROWNS SHALL HAVE A MINIMUM WIDTH OF 7/16" OVERALL

MWFRS (MAIN WIND FORCE RESISTING SYSTEM)

1. AN ENGINEERED LATERAL BRACING DESIGN HAS BEEN PROVIDED FOR THIS PLAN. REFER TO LATERAL BRACING PAGES AND DETAILS FOR CONSTRUCTION DETAILS.
2. WALLS SHOWN IN CONTINUOUS LINETYPE ON LATERAL BRACING PAGES ARE SHEARWALLS THAT HAVE BEEN ENGINEERED TO RESIST WIND LOADS BASED ON ASCE 7-05 "THE STANDARD"
3. LIB'S SHOWN ON PLAN ARE IN APPROXIMATE LOCATIONS THESE MAY BE MOVED UP TO THREE FEET ALONG SAME SHEAR LINE, WHERE CONDITIONS ALLOW.
4. WALLS SHOWN IN HIDDEN LINETYPE ON LATERAL BRACING PAGES ARE NON-SHEARWALLS AND ARE NOT INTENDED TO PROVIDE RESISTANCE TO WIND LOADS.
5. ROOF AND FLOOR WOOD DIAPHRAGMS HAVE BEEN DESIGNED WITH SUFFICIENT CAPACITY TO TRANSFER ALL WIND LOAD TO ADJACENT SHEARWALLS.
6. MAIN WIND FORCE RESISTING SYSTEM DESIGNED PER LOCAL CONSTRUCTION STANDARDS, IRC/IBC 2006 AND ACCEPTED ENGINEERING PRACTICE.

MPCW FLOOR TRUSSES

1. **CRITERIA.** DESIGN TRUSSES FOR THE MINIMUM LINE AND POINT LOADS SHOWN ON PLAN (LINE LOADS FROM UPPER WALLS ARE MINIMUM 100 LB/FT U.N.O.)
2. **BRACING.** RESTRAIN TOP CHORD WITH FLOOR SHEATHING AND BOTTOM CHORD WITH CEILING GYPSUM . RESTRAIN TRUSSES AT POINTS OF BEARING TO PREVENT TOPPLING.
3. **TRANSITORY FLOOR VIBRATION AND SOUND TRANSMISSION.** THE FLOOR SYSTEM INCLUDES NO MEASURES TO SPECIFICALLY CONTROL FLOOR VIBRATION OR SOUND TRANSMISSION. CONTACT ENGINEER PRIOR TO CONSTRUCTION IF SPECIFIC PERFORMANCE CRITERIA ARE DESIRED.
5. **POINT LOADS ON FLOOR SYSTEM.** PROVIDE BLOCKING FROM UNSUPPORTED POINT LOADS ON FLOOR SYSTEM TO SUPPORT BELOW. BLOCKING MAY BE ANGLED MIN 60° FROM HORIZONTAL.

GENERAL

1. ALL DESIGNS BASED ON IRC 2006 COMPLIANCES.
2. GRADE MARKS ON ALL LUMBER SHALL BE VISIBLE AT TIME OF INSPECTION.
3. DO NOT USE END JOINTED LUMBER FOR HORIZONTAL FRAMING MEMBERS.
4. ALL CONNECTIONS TO BE FASTENED PER FASTENING SCHEDULE AND FRAMING DETAILS.
5. ALL FRAMING CREATING CONCENTRATED LOADS TO BE INSTALLED EXACTLY IN THE LOCATIONS SHOWN ON PLAN TO PROVIDE A CONTINUOUS LOAD TRANSFER PATH TO CONCRETE.
6. THESE PLANS ARE COPYRIGHT MLAW AS OF THE YEAR DATED.